HEIDENHAIN

Operating Manual

HEIDENHAIN TNC 131/135

Point-to-Point with Straight Cut

TNC 131 TNC 135

August '86

Contents

A 1. Brief description of control units TNC 131 and 135

The controls TNC 131 and TNC 135 are 3-axis manual data input (M.D.I.) controls from HEIDENHAIN. The controls have been designed for direct programming on the machine by the machine operator. For this reason, some of its details purposely deviate from established programming standards. Special emphasis has been placed on clear and simple operation.

After you have acquainted yourself with the control, you will realize that the many keys with their NC-symbols – at first perhaps confusing – will make working with the controls very easy.

The controls have been liberally equipped with displays. The TNC 131, in addition to a single-line display for dialogue text and program block, is also equipped with separate displays for entry values and actual position values.

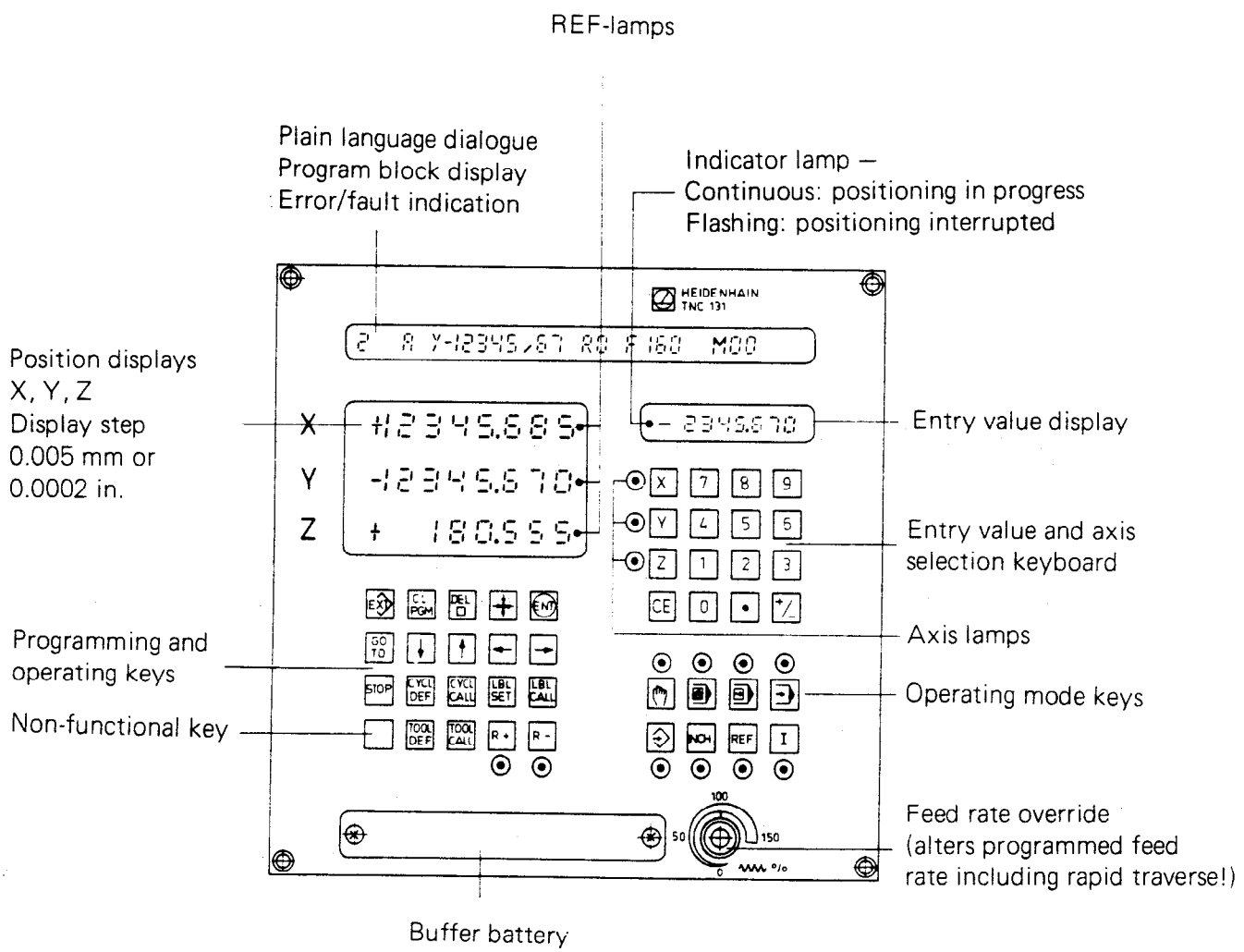

Instead of a single line display for dialogue text and program blocks, the TNC 135 is equipped with a VDU-screen (the VDU unit is connected to the rear of the control). Its features are otherwise identical to those of the TNC 131.
Up to 8 lines of 32 characters each may be displayed on the VDU-screen of the TNC 135. For better clarification, certain lines are brighter, and certain lines are displayed inverted. The contrast may be adjusted with the R/H potentiometer, whilst the L/H potentiometer on the front panel of the VDU-unit is for the background light intensity.

Line	Screen display	Appearance
1.	**Dialogue line** (Dialogue for programming, fault/error indication)	green background/inverted
2.	Display of previous program block	normal brightness
3.	**Current program block** and cursor function	very bright
4.	**Editing line**	green background/inverted
5.	Display of next program block	normal brightness
6.	Display of successive program block	normal brightness
7.	Cycle display, called up via CYCL CALL	very bright
8.	**Display of tool** currently in use	very bright

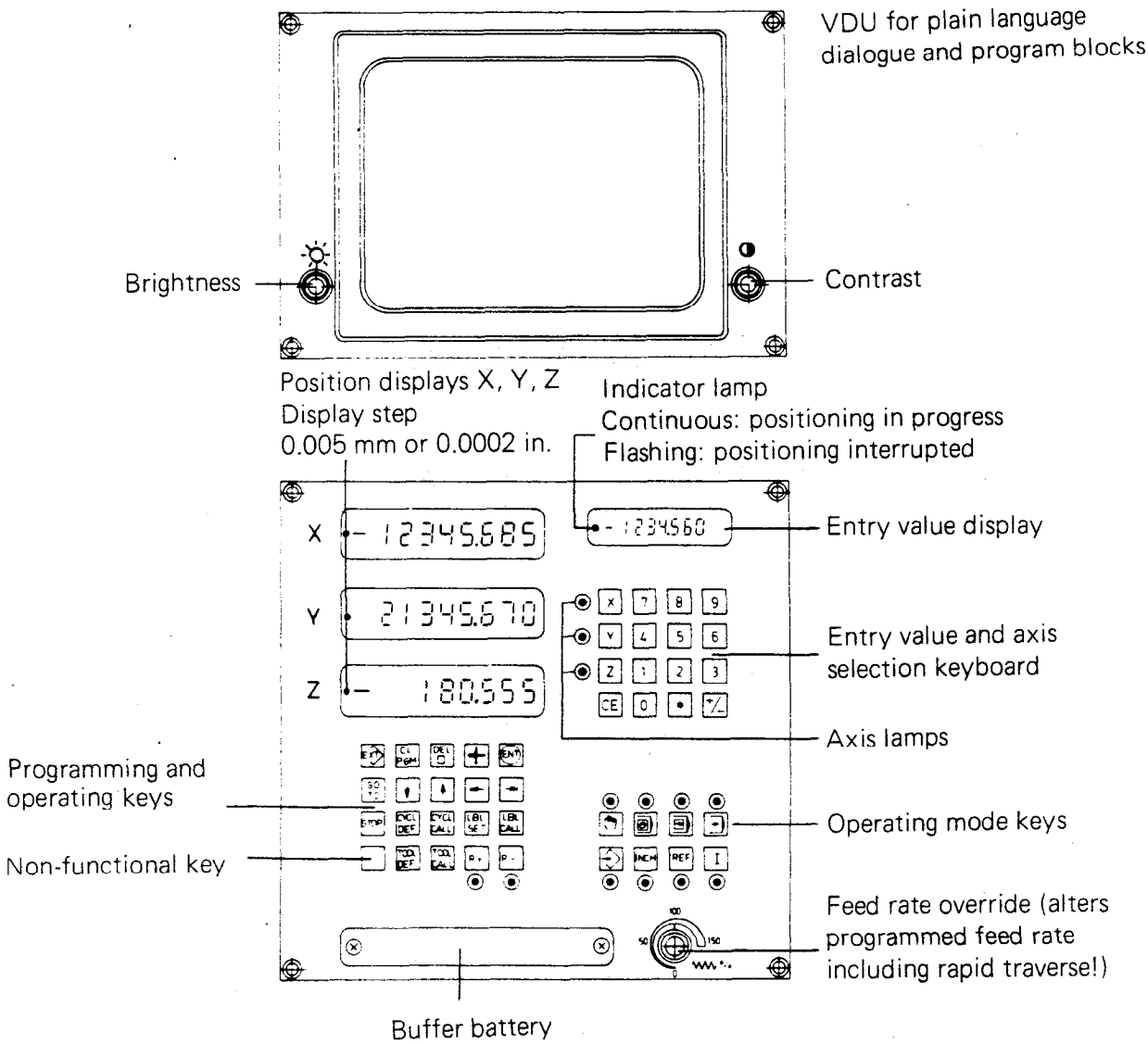

Program entry by the machine operator is in the form of a plain language dialogue between the operator and the control for both systems. The required data is requested in the correct sequence in plain language.

The TNC 131/135 incorporates a metric/inch converter and also has the following additional facilities:
.Tool compensation (radius and length)
.Programming of feed rates/rapid traverse in mm/min or 0.1 in./min.
.Programming of spindle speed in r.p.m.
.Subroutines and program part repeats
.Canned cycles
.Auxiliary functions (M-functions)

The TNC 131/135 may be programmed either

by hand
.**with stationary machine** from drawing or program sheet
.step by step program entry with **automatic machining of the first workpiece of a batch** (Teach-in)
.by **transferring actual machine position data** during conventional machining of workpiece (Playback)

or externally
.via the data transfer interface. Input may be via a magnetic tape storage unit, a punched tape reader, teletype, printer, or any other peripheral device with a V.24-compatible interface.

For permanent program storage, special HEIDENHAIN magnetic tape units type ME 101/ME 102 are available. After program entry into the memory of the TNC, workpieces may be machined one after another.

Please note:
We are constantly updating our TNC-controls. It may therefore be possible that a certain control varies from the type generally described in this manual. Because of the guidance given to the operator by the plain language dialogue, such alterations will present no problems.

A 2. Keyboard of TNC 131/135

Basic Symbols	Meaning
	Machine traverse "controlled"
	Single block
	Program memory (store)

Operating Mode keys

Key symbol	Meaning	see section
	Manual operation 1. In this mode the control operates only as a DRO and gives absolutely no commands to the machine. The machine may only be traversed via external means.	
	2. Setting of datum values	B 5.
REF	3. Setting datum by automatic storing of the REF-values (=reference marks relative to the actual position)	B 6.
	4. Manual or automatic reference mark-approach	B 6.
	Single block control The TNC permits automatic positioning using absolute or incremental dimensions, without effecting a program in the memory. **Only one block** may be entered at a time. (Positioning block, tool call). Operation with cycles, subroutines or program part repeats is not possible in this operating mode. A tool call can only be effective if .the tool has been defined beforehand, i.e. length and radius compensation have been entered into the **program memory.** .The external START-button has been operated.	G

Key symbol	Meaning	see section
	Entry and editing Program entry is carried out according to dialogue-prompting i.e. all entries required for programming are requested in the correct sequence via the dialogue display. The machining program may consist of the following program blocks: .Positioning block .Tool definition .Tool call .Cycle definition .Cycle call .Label set .Label call .STOP-block	C
	Single block program run In this operating mode, the stored program may be run by starting each individual block separately.	H
	Automatic program run With a single press of the START-button, the stored program will automatically run either to a programmed STOP or to its end.	H
INCH	**Inch** Entry and display of .position values in inches .feed rate values in 0.1 in./min. mm/inch conversion is permitted at any time.	B 4.
I	Incremental dimensions; I switched off: absolute dimensioning	C 3.

Programming and Operating Keys

Key symbol	Abbreviation for		Meaning	see section
EXT	—		External data input or output	E 3 E 4
✛	—		Actual position: Transfer of actual machine position data into program memory	D 3
CL PGM	CLEAR PROGRAM		Clear the machining program	F 7
DEL □	DELETE BLOCK		Delete block / NO-decision	F 3 A 3.3
ENT	ENTER		Enter into memory / YES-decision	A 3.2 A 3.3
GO TO	GO TO BLOCK . . .	Editing keys	Go to block No. . . .	F 1
↓ ↑	—	Editing keys	"Paging" of program content forwards or backwards	F 2
← →	—	Editing keys	Cursor movement for program word selection	F 5
STOP	STOP		Programmed stop or interruption of positioning	C 4
CYCL DEF	CYCLE DEFINITION	Cycle keys	Definition of canned cycle	C 6
CYCL CALL	CYCLE CALL	Cycle keys	Call-up of canned cycle	C 7
LBL SET	LABEL SET	Subroutine keys	Allocation of program label (for subprograms or program part repeats)	C 6.1
LBL CALL	LABEL CALL	Subroutine keys	Call-up of program label (Jump to label No.)	C 6.2
TOOL DEF	TOOL DEFINITION	Tool keys	Tool definition (Tool No., length, radius)	C 1
TOOL CALL	TOOL CALL	Tool keys	Call-up of required tool	C 2
R+	—	Radius compensation keys	Tool radius compensation "PLUS". Traverse is greater than drawing dimension by tool radius compensation	C 3
R-	—	Radius compensation keys	Tool radius compensation "MINUS". Traverse is smaller than the drawing dimension by tool radius compensation.	C 3

Entry value and axis selection keyboard

Key symbol	Abbreviation for		Meaning	see section
0 . . . 9	—	Entry value and axis selection keys	Entry of numerical values. (decimal keyboard)	A 3.2
·	—		Decimal point	A 3.2
+/-	—		Sign change	A 3.2
X Y Z	—		Axis selection	B 5 C 3
CE	CLEAR ENTRY		For deletion of entered value or cancellation of fault/error indication	A 3.2

If a key, which has no function in the selected operating mode, is inadvertantly pressed, then the following error indication is displayed - "KEY NON-FUNCTIONAL".

This error indication is cancelled with the CE -key.

A 3. Dialogue of TNC 131/135

The operation and programming of the HEIDENHAIN controls TNC 131/135 are characterised by the dialogue. After the operator has initiated a dialogue, the control takes the lead during program entry by displaying relevant questions in plain language.

A 3.1 Methods of dialogue initiation

Dialogue selection with keys	Manual operating	in operating mode: Single block operation	Entry and editing	Program run	See section
X Y Z	Setting of datum position	Positioning (Positioning block)	Positioning (Positioning block)		B 5 C 3
STOP			Programmed STOP		C 4
TOOL DEF			Tool definition		C 1
TOOL CALL		Tool call	Tool call		C 2
LBL SET			Allocation of label		C 6.1
LBL CALL			Call-up of label		C 6.2
CYCL DEF			Cycle definition		C 6
CYCL CALL			Cycle call		C 7
CL PGM			Clear Program		F 7
INCH	mm/inch conversion	mm/inch conversion	mm/inch conversion	mm/inch conversion	B 4
REF	Reference mark evaluation				B 6
EXT	Programming of the transfer rate for data interface		Reading-in of programs via the data interface	Output of programs to peripheral unit	E 3 E 4

A 3.2 Rules for responding to dialogue question in program blocks

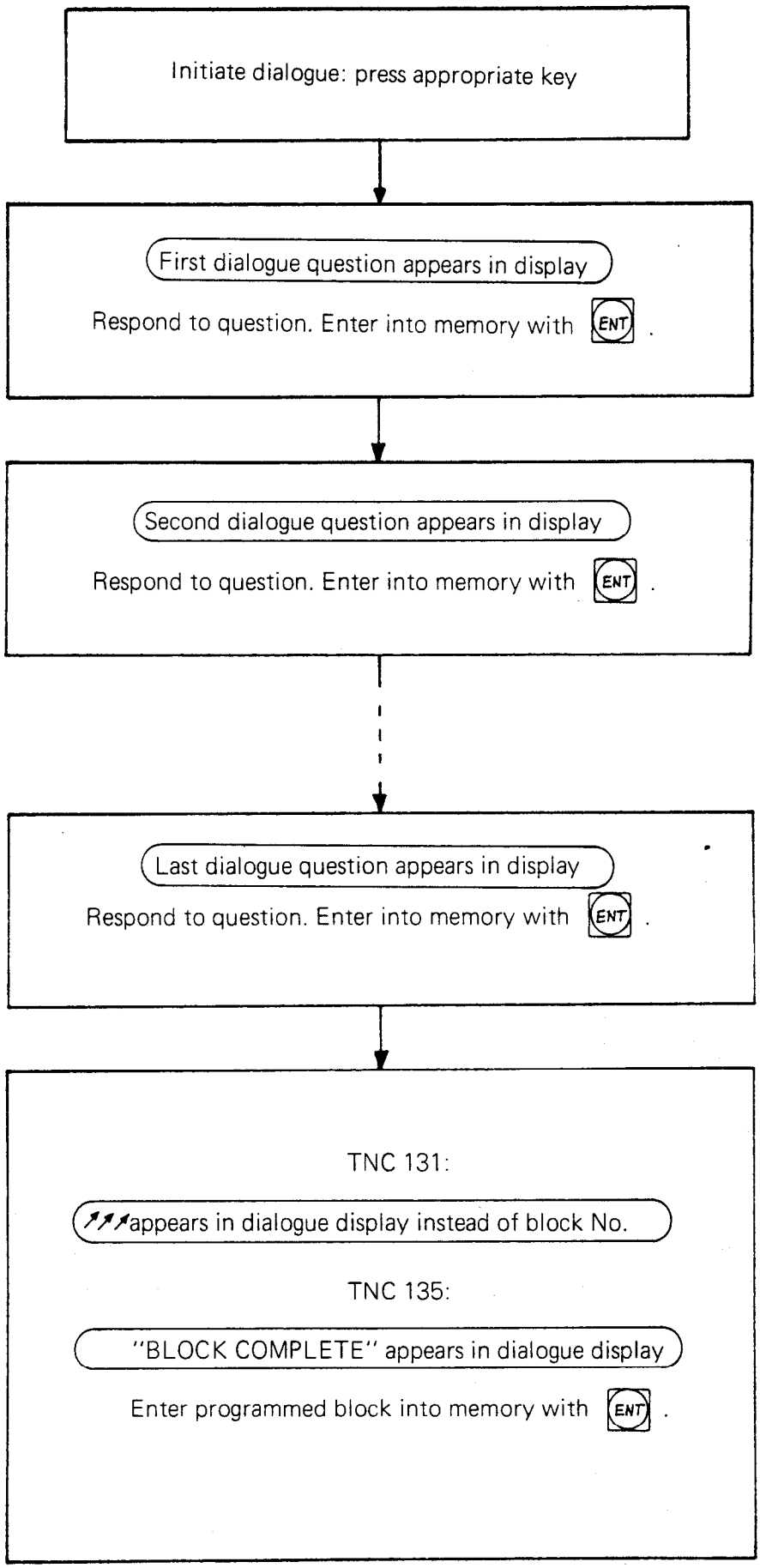

Numerical values are entered as follows:

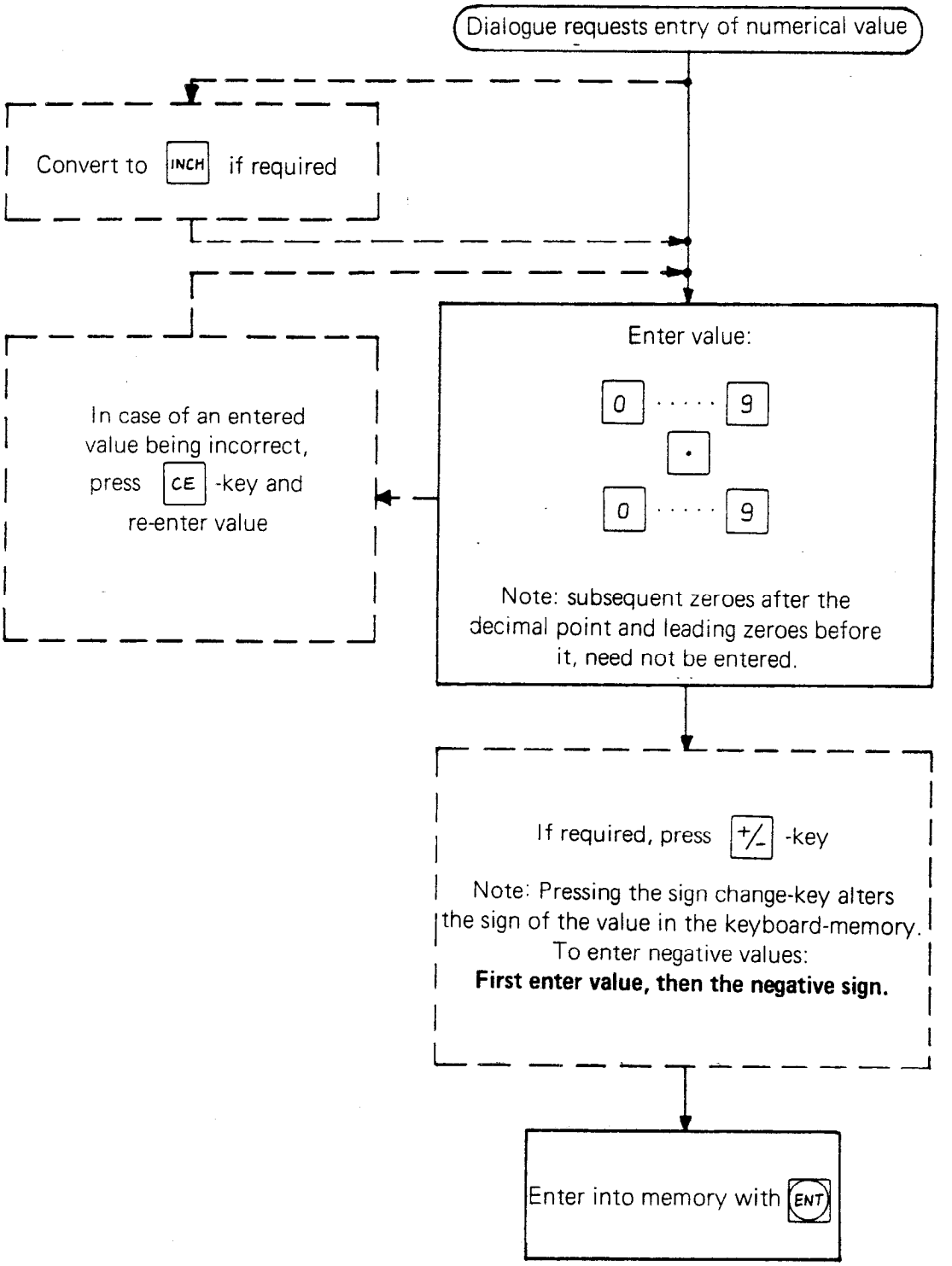

Entry step of position values

When operating in "mm"-mode, entry is in 0.005 mm steps. If the least significant digit is neither a "0" nor a "5", then the TNC 131/135 rounds the value off, either up or down as appropriate.

When operating in "inch"-mode, entry is in 0.0002 in. steps. If the least significant digit is odd, the TNC 131/135 rounds the value down.

A 3.3 Response to dialogue-question with yes/no decision

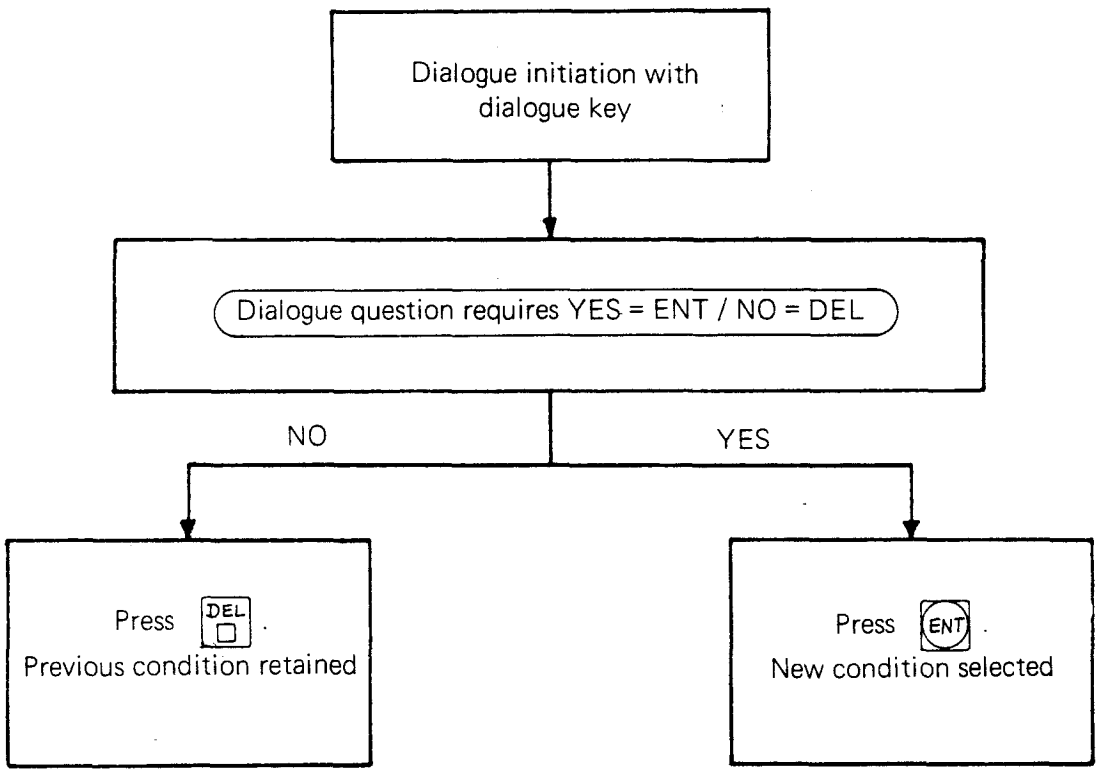

B. Prepatory tasks

B 1. Flow chart for working with TNC 131/135

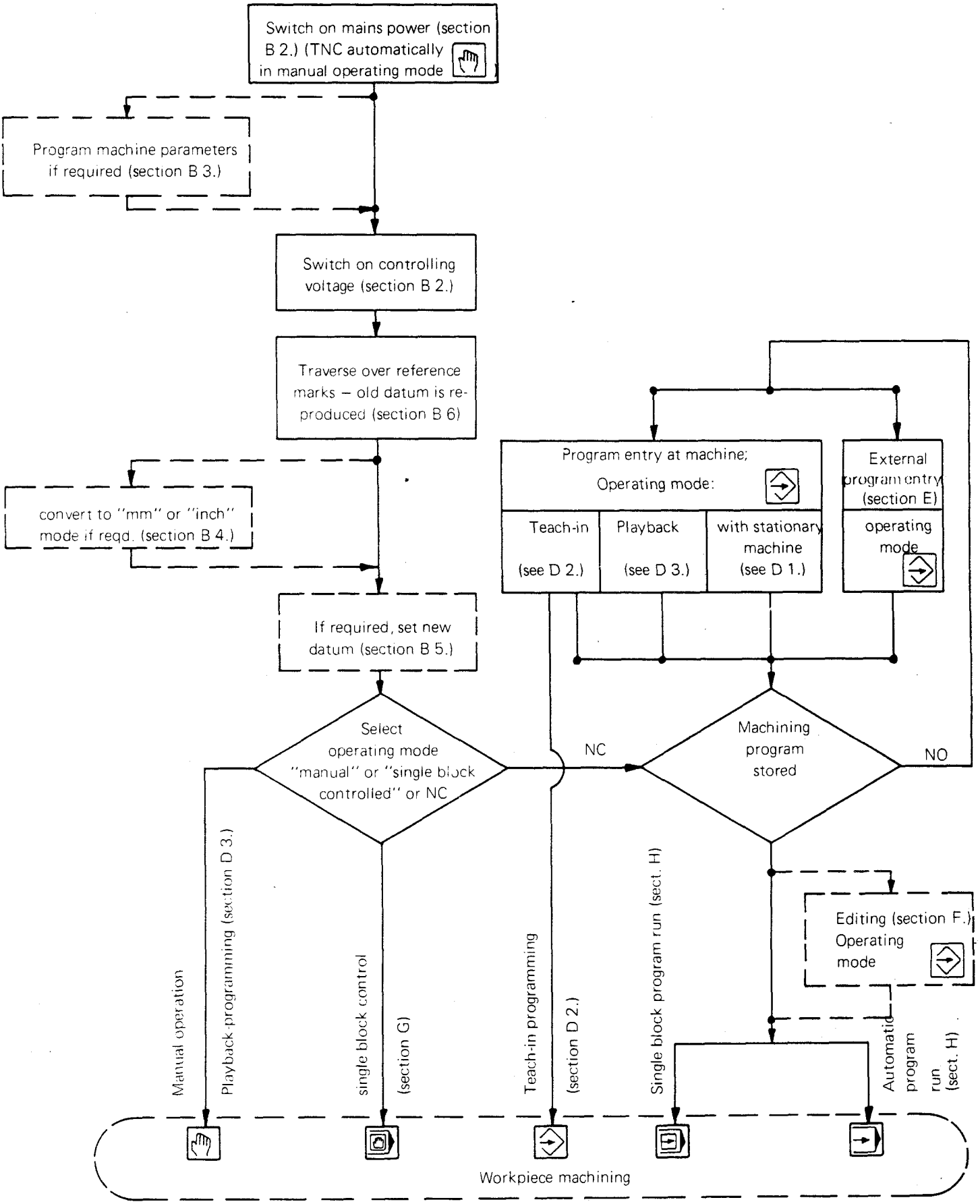

B 2. TNC 131/135 Switch-on

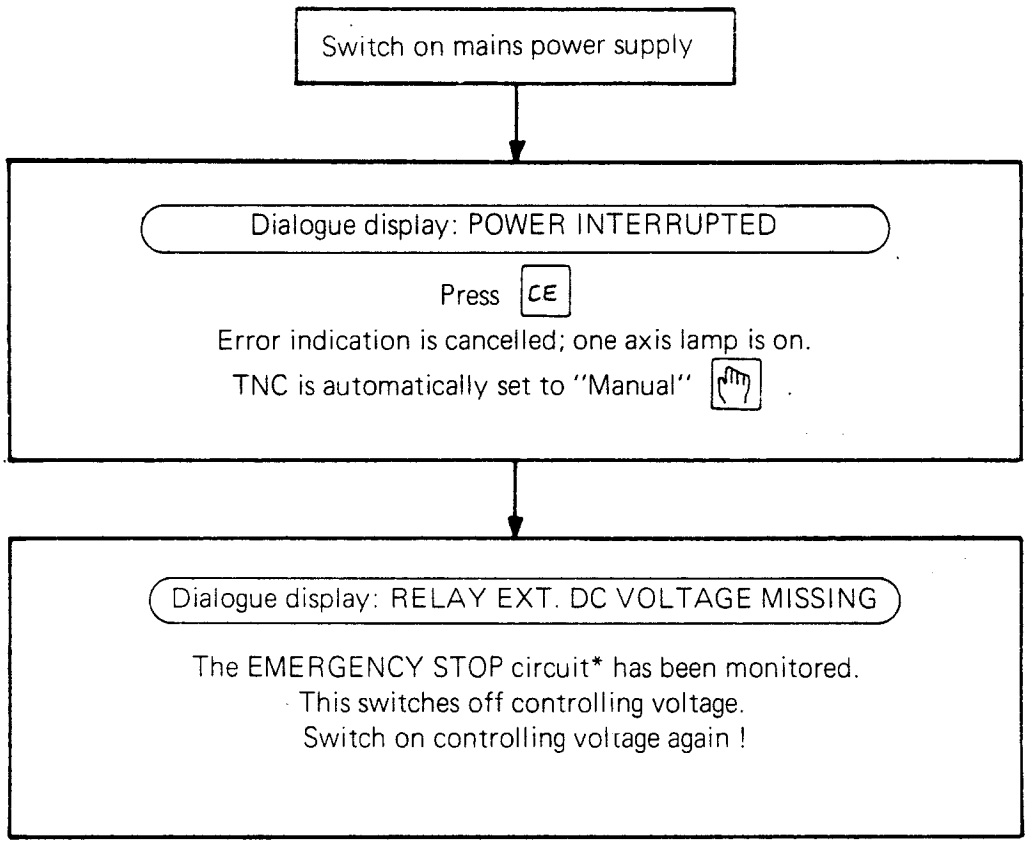

TNC 131/135 is operational.

*Owing to importance of safety during machine and control operation, the EMERGENCY STOP is monitored each time the control is switched on.

B 3. Programming of machine parameters

Initiate dialogue:

Depending on whether the machine parameters are to be newly entered or just "edited",

either

a) remove the buffer battery **before** switching on the mains power supply. Machine parameters which have already been programmed will be deleted when the dialogue is initiated in this manner: all data must be re-entered.

or

b) press -key whilst switching on the mains power supply. When the dialogue is initiated in this manner, the programmed data appears in the entry value display; they may either be retained by pressing the ENT -key, or amended by entering new values.

Method (b) for dialogue initiation prevents a stored machining program from being erased. The machine parameters are assigned by the machine manufacturer.

Depending on whether the control is of type TNC 131 or TNC 135, machine parameters are requested either via code numbers or in plain language dialogue.

1. Plain language entry

The control poses the following questions:

Machine parameters	**Entry values (to be completed by the machine tool manufacturer)**
RAPID TRAVERSE X-AXIS (MM/MIN) =	_____
RAPID TRAVERSE Y-AXIS (MM/MIN) =	_____
RAPID TRAVERSE Z-AXIS (MM/MIN) =	_____
Only with software version for common drive with backlash: RAMP DOWN MINIMUM STEP ?	_____
R.P.M. CODE ?	_____
Only with software version for simultaneous operation. SPEED CODE FOR AXES 0 . . . 7 ?	_____

2. Entry of machine parameters via code numbers

Code number	**Machine parameter**	**Entry values (to be completed by the machine manufacturer**
MACHINE PARAMETER 01	RAPID TRAVERSE X-AXIS	_____
MACHINE PARAMETER 02	RAPID TRAVERSE Y-AXIS	_____
MACHINE PARAMETER 03	RAPID TRAVERSE Z-AXIS	_____
MACHINE PARAMETER 04	POSITION SUPERVISION: LEADING ?	_____
MACHINE PARAMETER 05	POSITION SUPERVISION: TRAILING ?	_____
MACHINE PARAMETER 06	STANDSTILL RANGE	_____
MACHINE PARAMETER 07	R.P.M. CODE	_____
MACHINE PARAMETER 08	RAMP DOWN MINIMUM STEP (only with software version for common drive with backlash)	_____
MACHINE PARAMETER 09	SPEED CODE FOR AXES (this parameter is valid for all software versions in the coded parameter entry sequence)	_____
MACHINE PARAMETER 10	Starting time for "tapping"	_____
MACHINE PARAMETER 11	Output of S or T ?	_____
MACHINE PARAMETER 12	Selection of the active axes	_____

B 4. Metric/Inch conversion

The control may also be programmed in the "inch"-measuring system (INCH -key). A machining program which has been entered in inches may also be run in the metric system. Conversion is verified with a dialogue question:

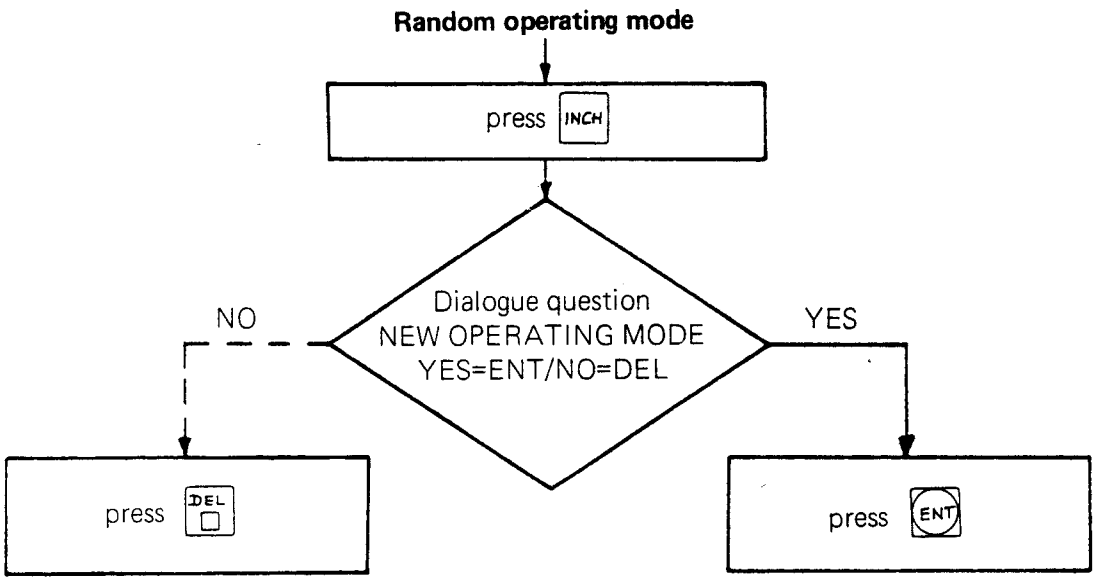

B 5. Setting of datum

As explained in section C 3., it should be decided whether nominal value positioning is in absolute or incremental dimensions, i.e. whether the position data is related to a fixed absolute datum or is related to the previous position.

For example, if the edge of a workpiece in the X-axis serves as a reference edge, then the value zero is assigned to this edge. The edge is touched, the dialogue for "Setting datum" is initiated by pressing the X -key, zero is entered by pressing either the 0 -key or the CE -key, and the entry value is transferred to the position display via ENT .

On the other hand, the edge of the workpiece may be assigned with the position value zero by setting the position value in another known position (e.g. value "50" in the adjacent sketch). Datum set correlates specified position values to positions in the traversing range.

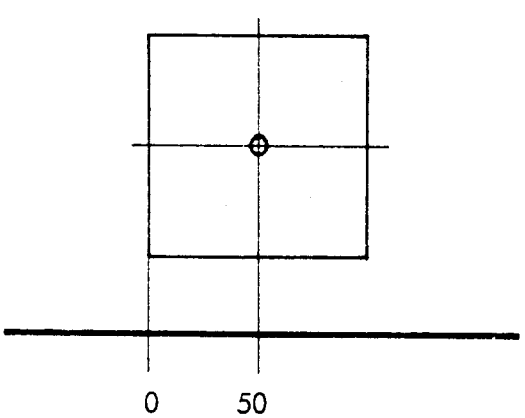

B 6. Traversing over reference marks

To simplify the finding of the datum after a power interruption, linear transducers in all the axes have reference marks (on the scale). During the setting of a datum these reference marks are also assigned with specific display values, the so-called REF-values.
After power interruption, the TNC 131/135 control can reproduce the correlation of display values to positions which was set during datum-set by simply traversing over the reference marks:

.the control will only store the REF-values if, after switching on the control, the machine has been traversed over the reference marks before the setting of the datum (" [REF] switched on")
.After a power interruption (switching the control off, and then switching it on again), the last REF-values to be stored immediately appear in the position displays:
If the [REF] -key is now pressed, then the individual axes only begin to count when the machine is traversed over the reference marks, so that the displayed values then correspond to the last datum which was set.
In all cases, the machine must be traversed over the reference marks after TNC switch-on (after pressing the [REF] -key and the [ENT] -key)
.either to reproduce the last datum set or to store new REF-values with a new datum set.

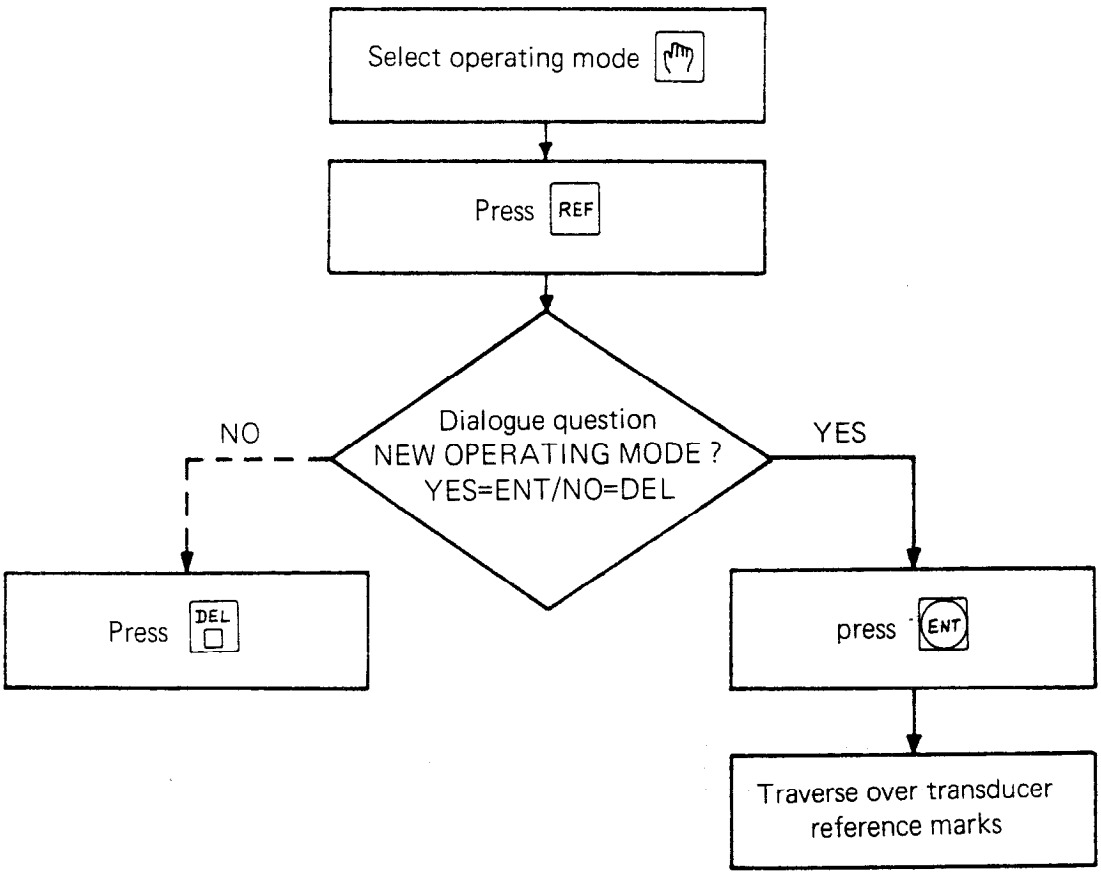

The machine may be traversed over the reference marks either **manually** or **automatically**.

Automatic traverse over reference marks is activated by the external START-button. The control gives a nominal value for the positive traversing direction of the machine in the axis-sequence Z, Y, X. (For safety reasons, each axis must be started separately). The appropriate counter begins to count when the machine is traversed over the corrensponding reference mark, and the axis becomes inactive. When the machine has traversed over all three reference marks, any desired operating mode may be selected.

For machines with three axes we recommend that the [REF] -key remains on. Illumination of the REF-lamps indicates that the machine has already been traversed over the reference marks, and that the REF-values (= the position values correlated to the reference marks) have been automatically stored.

In the event that the transducer reference mark cannot be located by the machine (either because of the danger of a collision between the tool and the workpiece, or because the TNC 131/135 is being used as a 2 axis control), the operating mode may be switched off simply by pressing the [REF] and [ENT] -keys again.

C 1. Tool definition [TOOL DEF]

TNC controls take tool compensation into consideration - when entering a machining program, the dimensions on the drawing may be programmed for a workpiece contour. The length and radius of the tools are required for the compensation. This data is entered in the tool definition.

Tool definition data may be entered at any random location within the machining program. By using the search routine, any specified tool may be quickly located and, if need be, amended.

Note:
While the length of a tool is automatically taken into account after a tool call, the desired tool radius compensation must be specified in each positioning block.

Select dialogue sequence with [TOOL DEF]

Dialogue question	Response
TOOL NUMBER ?	Possible entry values: .for machines **without** automatic tool change: 1 - 255 .for machines **with** automatic tool change: 1 - 99 (The control can provide coded tool numbers up to 99) **Note:** No tool may be defined with tool number 0 (this tool number has already been reserved for "no tool" i.e. for length L=0 and radius R=0).

Dialogue question	Response
TOOL LENGTH L ?	The tool length is determined as follows:

a) Tool in chuck (without longitudinal stop)

Workpiece surface Z = 0

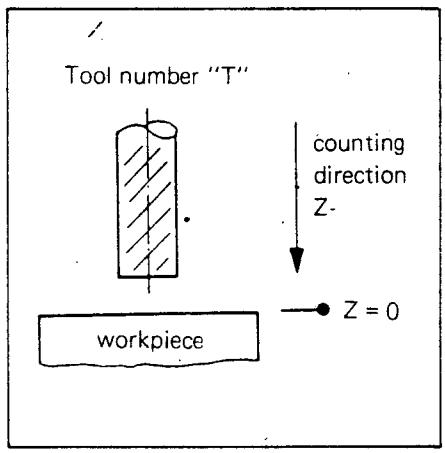

Insert tool No. 1
Touch workpiece surface and set position display to "0".
Enter tool definition 1:
TOOL LENGTH = 0

After tool change
(also for change of tool No. 1)
Insert tool No. "T".

Touch workpiece surface and enter the value shown in the Z-position display (including sign) into entry value display by pressing

Enter this value into tool definition "T":
TOOL LENGTH L = . . .
or edit tool definition 1:
TOOL LENGTH L = . . .

Workpiece surface Z ≠ 0

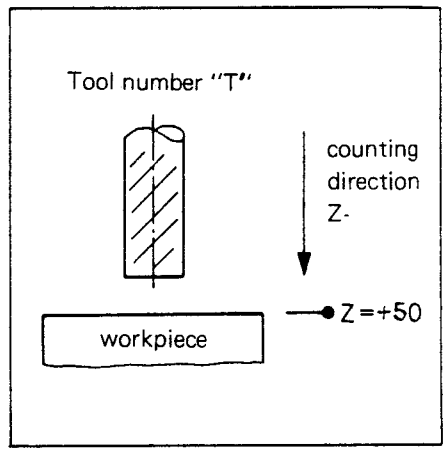

Insert tool No. 1
Touch workpiece surface and set position display to "+50".
Enter tool definition 1:
TOOL LENGTH = 0

After tool change
(also for change of tool No. 1)
Insert tool No. "T".

Touch workpiece surface and note down value in Z-position display (not forgetting sign).
Calculate compensation value L as follows: Compensation value L = (position display value Z) – (surface position).

b) Tool in chuck with longitudinal stop
The tool length compensation value is determined as in a). However, once established, the compensation value doesn't change after removal or insertion of the tool.

Dialogue question	Response
	c) Preset tools

Workpiece surface Z = 0

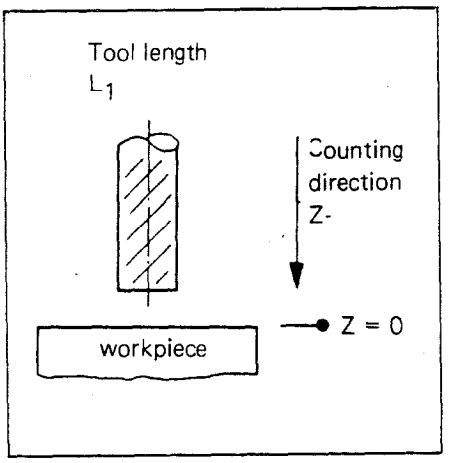

Insert tool No. 1
Touch workpiece surface and set position display Z to $+L_1$.
Enter tool definition 1:
TOOL LENGTH L = $+L_1$
Enter tool definition 2:
TOOL LENGTH L = + L_2 etc.

Workpiece surface Z ≠ 0

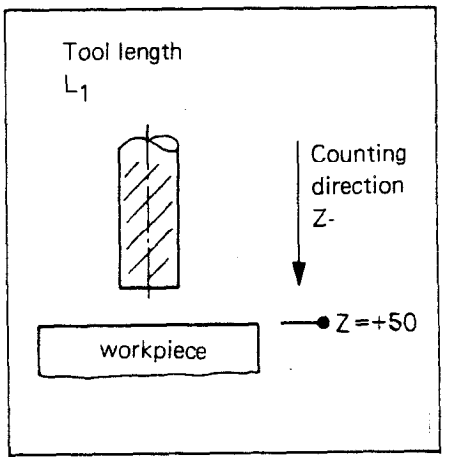

Insert tool No. 1
Touch workpiece and set position display Z to (tool length L_1) + (surface position value).
Enter tool definition 1:
TOOL LENGTH L = + L_1
Enter tool definition 2:
TOOL LENGTH L = + L_2 etc.

Dialogue question	Response
TOOL RADIUS R ?	The tool radius compensation is entered as a positive value. The compensation **direction** is specified in the positioning blocks. **Special case:** **Programming in Playback mode (see section D 3)** In this operating mode, the machine is traversed manually (handwheel or axis key) to the actual position value to be strored. This actual position value includes the length and radius compensation for the tool in use. The values $L_1 = 0$ and $R_1 = 0$ should be entered in the tool definition for tool No. 1 and the radius R_1 for the tool in use should be noted down. Positioning blocks should each be programmed in "Playback mode" with the correct radius compensation: R+, R-, R0. When a tool is eventually changed and a new tool is inserted whose radius R_2 doesn't coincide with R_1, proceed as follows: $\boxed{\text{Radius compensation value} = R_2 - R_1}$ This radius compensation value may be **either positive or negative** and should be entered in the tool radius definition for R_1 (don't forget the sign). The length compensation should also be re-entered.

The tool definition allocates two program blocks. When "paging" the program contents, the following blocks appear in the dialogue display:

. . . . . .	TOOL DEF . . . TOOL DEF . . .	L . . . R . . .
Block number	Tool definition Tool definition	Length or radius definition Value for tool length or radius

C 2. Tool call / Tool change TOOL CALL

When changing a tool, the data (length and radius) for the new tool should be called up with the TOOL CALL -key.

Note:
A STOP must be programmed before each tool change – the STOP may only be omitted when the tool call is solely to change the spindle speed. The auxiliary functions M00 and M06 (see section C3) fulfill the same function as the STOP-block if this is to be programmed in a block after which a tool change is to take place.

Programming procedure for a tool change:

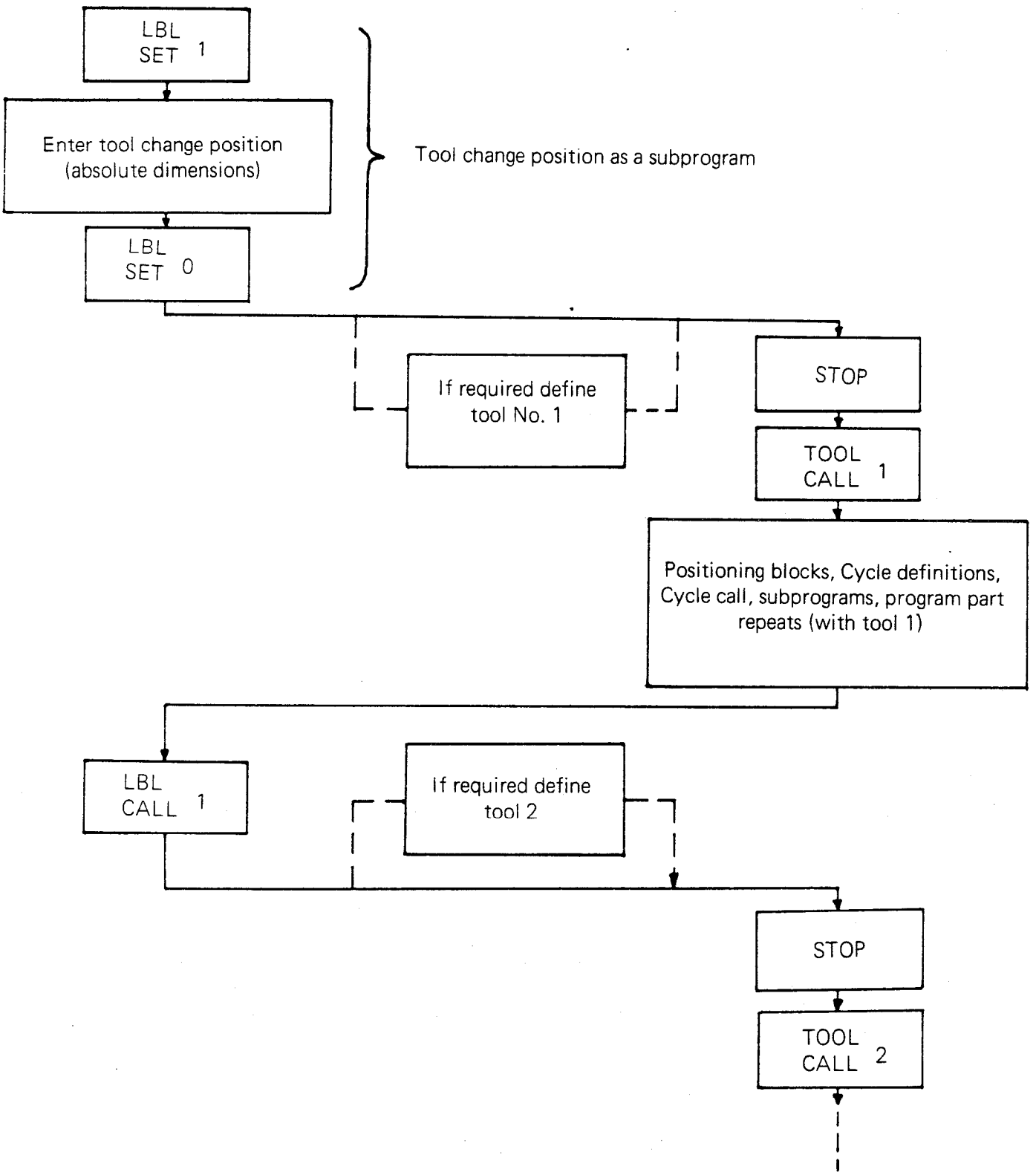

Dialogue initiation with [TOOL CALL] -key

Dialogue question	Response
TOOL NUMBER ?	Possible entry values: 0 – 255 **Note:** If a traverse is made after a tool call with no compensation, a tool-call should be programmed with the number 0, and should be run by pressing the external START-button (the tool with number 0 has already been programmed with length L = 0 and radius R = 0)
WORKING SPINDLE AXIS X/Y/Z ?	Entry of the axis to which the spindle axis is parallel; the tool length compensation is effective in this axis; the radius compensation (if required) is effective in the other two axes.
SPINDLE SPEED S = (RPM) ?	The spindle speed is entered in r.p.m. with a maximum of four digits. The control automatically rounds off the entered speed to the next standard speed. **Note:** When entering the machine data the machine-manufacturer determines a specified spindle speed range. If a spindle speed outside this fixed range is programmed, the following error is indicated when the program is run. INCORRECT SPINDLE SPEED

The following spindle speeds may be programmed:

r.p.m.	r.p.m.	r.p.m.	r.p.m.	r.p.m.
0	1	10	100	1000
0,112	1,12	11,2	112	1120
0,125	1,25	12,5	125	1250
0,14	1,4	14	140	1400
0,16	1,6	16	160	1600
0,18	1,8	18	180	1800
0,2	2	20	200	2000
0,224	2,24	22,4	224	2240
0,25	2,5	25	250	2500
0,28	2,8	28	280	2800
0,315	3,15	31,5	315	3150
0,355	3,55	35,5	355	3550
0,4	4	40	400	4000
0,45	4,5	45	450	4500
0,5	5	50	500	5000
0,56	5,6	56	560	5600
0,63	6,3	63	630	6300
0,71	7,1	71	710	7100
0,8	8	80	800	8000
0,9	9	90	900	9000

The tool call only allocates one program block. The following block appears in the dialogue display:

...	TOOL CALL ...	X/Y/Z	S ...
Block number	Tool Call Tool number	Spindle axis	Spindle speed

C 3. Positioning block

The dimensions of a workpiece are either absolute or incremental dimensions. If necessary, the TNC 131/135 should be converted from entry in absolute dimensions to entry in incremental dimensions before the positioning block dialogue sequence is initiated.

For programming in incremental dimension, the [I] -key should be pressed (the corresponding lamp is on). A new press of the key returns to absolute programming (the corresponding lamp is off). If conversion is forgotten, then the part of the block already programmed must be deleted by pressing the [DEL □] -key, and re-entered in the correct mode.

Firstly, some directions concerning the terms "Programming in absolute dimensions" and "Programming in incremental dimensions".

All absolute dimensions are related to an "absolute datum", whereas when programming in "incremental dimensions", the last established position serves as a "relative datum".

Absolute dimensioning
Example:

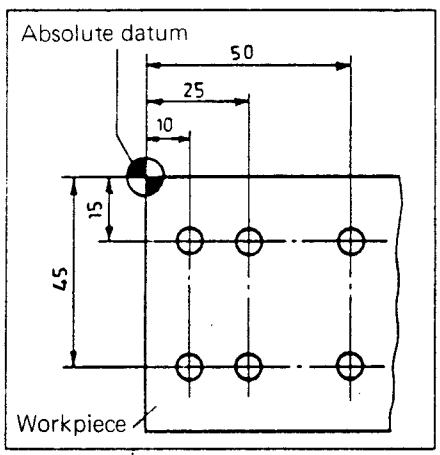

The upper left-hand corner of the workpiece is the "absolute datum" for dimensioning. The machine traverses **to** a dimension. It traverses **to** the entered nominal value.

Incremental dimensioning
Example:

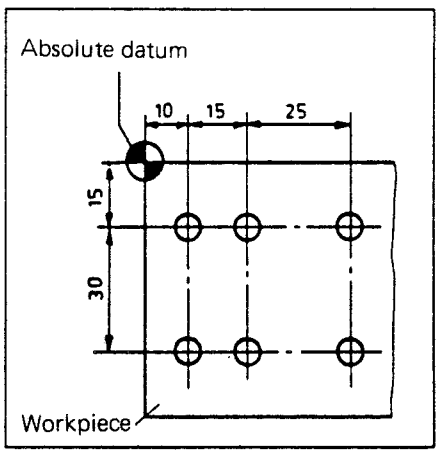

Incremental dimensioning commences from the upper left-hand corner of the workpiece. The machine traverses **by** the entered dimension starting from the position previously reached.

Programming in absolute dimensions offers the advantage of being able to perform geometric amendments to single positions without effecting the remaining position. Re-entry into an interrupted program after a power failure or any other defect is also more simple when programming in absolute dimensions (reproduction of the datum, see section B 6) is all that is necessary. Furthermore, a suitable location for the workpiece datum point can help to dispense with negative values.

On the other hand, **programming in incremental dimensions** may eliminate calculation work in many cases.

Initiate dialogue with axis-key [X], [Y] or [Z]

Dialogue question	Response
NOMINAL POSITION VALUE ?	Enter nominal position value
RADIUS COMPENSATION R+/R-/NO COMP. ?	It is merely a question of whether the radius compensation should lengthen or shorten the traversing distance. The radius compensation is selected by pressing the appropriate key [R+] or [R−] — the corresponding lamp is on. The [R+] and [R−] -keys signify the following:

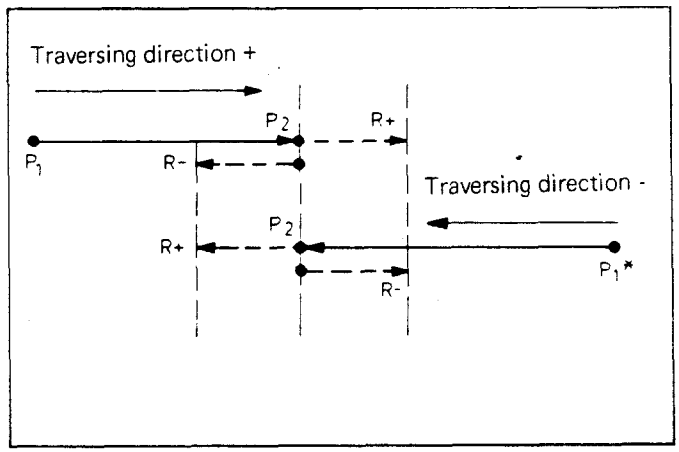

Tool radius compensation when machining an external contour.

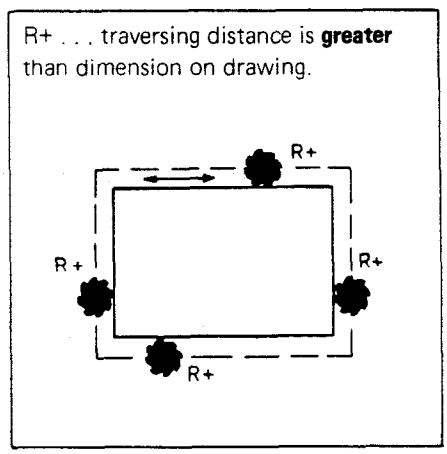

Tool radius compensation when machining an internal contour.

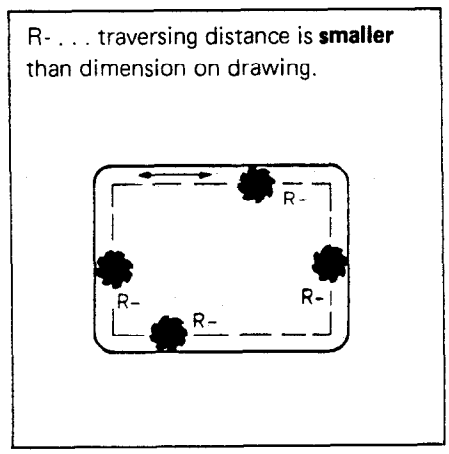

Dialogue question	Response
	If no radius compensation is to be entered, then neither of the lamps should be on. [R+] and [R-] are cancelled by pressing the key, the lamp of which, is on. **Note:** The dialogue question for radius compensation also appears when positioning blocks are being entered in the axis which was specified as the working spindle axis during tool call. The radius compensation value is not taken into account in this axis, irrespective of whether R+, R- or R0 has been entered.
FEED RATE ? F = . . .	The desired feed rate is entered in mm/min. or 0.1 in/min. with a maximum of 4 digits. F 9999 must be programmed if maximum feed rate (rapid traverse) is required. Possible feed rate values can be found in the tables below.

Feed rate values in mm/min.

1	2	3	4	5	6	7	8	9	10	11	12	13
14	15	16	17	18	19	20	21	22	23	24	25	26
27	28	29	30	31	32	33	34	35	36	37	38	39
40	41	42	43	44	45	46	47	48	49	50	51	52
53	54	55	56	57	58	59	60	61	62	63	64	65
66	67	68	69	70	71	72	73	74	75	76	77	78
79	80	81	82	83	84	85	86	87	88	89	90	91
92	93	94	97	100	102	105	108	112	115	118	121	125
128	132	136	140	144	149	154	160	164	169	174	180	184
189	194	200	205	211	217	224	230	236	243	250	257	264
272	280	288	297	306	315	324	334	344	355	365	376	388
400	412	424	437	450	462	474	487	500	514	529	544	560
576	593	611	630	649	668	689	710	731	753	776	800	823
848	873	900	924	948	974	1000	1028	1058	1088	1120	1151	1183
1216	1250	1286	1323	1361	1400	1447	1496	1547	1600	1648	1697	1748
1800	1848	1897	1948	2000	2057	2116	2177	2240	2302	2366	2432	2500
2572	2646	2722	2800	2884	2970	3059	3150	3246	3344	3445	3550	3657
3768	3882	4000	4119	4242	4369	4500	4620	4743	4870	5000	5143	5291
5443	5600	5767	5939	6117	6300	6491	6688	6890	7100	7315	7536	7764
8000	8239	8485	8738	9000	9240	9486	9740	9999				

Feed rate values in 1/10 inch/min.

1	2	3	4	5	6	7	8	9	10
11	12	13	14	15	16	17	18	19	20
21	22	23	24	25	26	27	28	29	30
31	32	33	34	35	36	37	38	39	40
41	43	44	45	46	48	49	50	52	54
55	57	59	61	63	65	67	69	71	72
74	76	79	81	83	85	88	91	93	96
98	101	104	107	110	113	117	120	124	128
132	135	140	144	148	153	157	162	167	172
177	182	187	193	197	202	208	214	220	227
233	241	248	256	263	271	280	288	296	306
315	324	334	344	354	364	373	383	394	405
417	428	441	453	466	479	492	506	521	536
551	570	589	609	630	649	668	688	709	728
747	767	787	810	833	857	882	906	932	957
984	1012	1042	1072	1102	1135	1165	1204	1240	1280
1317	1356	1400	1440	1483	1528	1575	1622	1670	1720
1772	1819	1867	1917	1969	2025	2083	2143	2205	2270
2338	2408	2480	2556	2633	2713	2795	2880	2967	3057
3150	3244	3341	3440	3543	3638	3735	3835	3999	

Note:
If feed rate values are programmed which do not correspond with the values in the tables, then they are rounded-off by the TNC 131/135 to the next standard value.

Dialogue question	Response
AUXILIARY FUNCTION - M ?	An auxiliary- or switching function is programmed with an M-word, e.g. the main spindle may be switched on or off. **Special M-functions which affect program run** M 00 interrupts program run after completion of the appropriate block and provides the command "Spindle STOP and coolant OFF". M 02 interrupts program run after completion of the appropriate block and selects block 1; furthermore, "Spindle STOP and coolant OFF" are also commanded. M 03 "Spindle clockwise" at beginning of block M 04 "Spindle counter-clockwise" at beginning of block M 05 "Spindle halt" at end of block. M 06 Tool change. Further functions as per M 00. M 08 "Coolant ON" at beginning of block. M 09 "Coolant OFF" at end of block. M 13 "Spindle clockwise" and "Coolant ON" M 14 "Spindle counter-clockwise" and "Coolant ON". M 30 Functions as per M 02. M 99 The same function as "CYCL CALL". If several M-functions are required for one block and these have not been accomodated in previous blocks, this can be overcome by programming each individual M-function with a positioning block which has been programmed in the incremental mode and with the position value "zero". The number of positioning blocks should correspond to the required number of M-functions. If an M-function is not required in programmed block, press ENT . **Note:** M-functions are assigned by the machine tool manufacturer and may be found in the machine operating manual.

M-function	Output at block Beginning	End
M 00		X
M 01		X
M 02		X
M 03	X	
M 04	X	
M 05		X
M 06		X
M 07	X	
M 08	X	
M 09		X
M 10		X
M 11	X	
M 12		X
M 13	X	
M 14	X	
M 15	X	
M 16	X	
M 17	X	
M 18	X	
M 19		X
M 20	X	
M 21	X	
M 22	X	
M 23	X	
M 24	X	
M 25	X	
M 26	X	
M 27	X	
M 28	X	
M 29	X	
M 30		X
M 31	X	
M 32		X
M 33		X
M 34		X
M 35		X

M-function	Output at block Beginning	End
M 36	X	
M 37	X	
M 38	X	
M 39	X	
M 40	X	
M 41	X	
M 42	X	
M 43	X	
M 44	X	
M 45	X	
M 46	X	
M 47	X	
M 48	X	
M 49	X	
M 50	X	
M 51	X	
M 52		X
M 53		X
M 54		X
M 55	X	
M 56	X	
M 57	X	
M 58	X	
M 59	X	
M 60		X
M 61	X	
M 62	X	
M 63		X
M 64		X
M 65		X
M 66		X
M 67		X
M 68		X
M 69		X
M 70		X

M-function	Output at block Beginning	End
M 71	X	
M 72	X	
M 73	X	
M 74	X	
M 75	X	
M 76	X	
M 77	X	
M 78	X	
M 79	X	
M 80	X	
M 81	X	
M 82	X	
M 83	X	
M 84	X	
M 85	X	
M 86	X	
M 87	X	
M 88	X	
M 89	X	
M 90	X	
M 91	X	
M 92	X	
M 93	X	
M 94	X	
M 95		X
M 96		X
M 97		X
M 98		X
M 99		X

Symbols in thicker print indicate special M-functions (e.g. **M 00**)

The positioning block allocates one program block:

. . .	A/I	X/Y/Z . . .	R+/R-/R0	F . . .	M . . .
Block number	Absolute or incremental dimensions	Axis Nominal position value	Direction of radius compensation	Feed rate	Code number of auxiliary function

C 4. Programmed STOP [STOP]

Initiate dialogue with [STOP]

Dialogue question	Response
AUXILIARY FUNCTION – M ?	If required, select desired auxiliary function M.

The STOP-block only allocates one program block:

. . .	STOP	M . . .
Block number	Stop	Code number for auxiliary function

C 5. Subprograms and program part repeats [LBL SET] [LBL CALL]

Program labels for marking subprograms or program part repeats may be set at any random location within a program. These label numbers serve as so-called "jump addresses".

A jump command to a label number always ensures the finding of the correct location within the program even after program editing (insertion and deletion of blocks). Numbers 1 to 255 may be used for allocating labels. The label number "0" is used as a mark for "End of subprogram".

C 5.1 Allocation of label numbers

Initiate dialogue with [LBL SET] .

Dialogue question	Response
LABEL-NUMBER ?	Enter desired number.

The allocation of a label number requires one program block. The following block appears in the dialogue display:

. . .	LBL . . .
Block number	Label number

C 5.2 Jump to a label number

Initiate dialogue with [LBL CALL] .

Dialogue question	Response
LABEL-NUMBER ?	Enter label number to be called-up.
SUBROUTINE = 0 / REP. = . . . ?	If the selected label-No. signifies a subroutine, enter "0". If the selected label-No. signifies a program part repeat, enter required number of repetitions.

A jump to a program mark requires one program block! The following block appears in the dialogue display:

. . .	CALL LBL . . .		REP . . . / . . .		
Block number	Label call	Label number	Repeats	No. of reps. programmed	No. of reps. still to be executed.

Subprograms

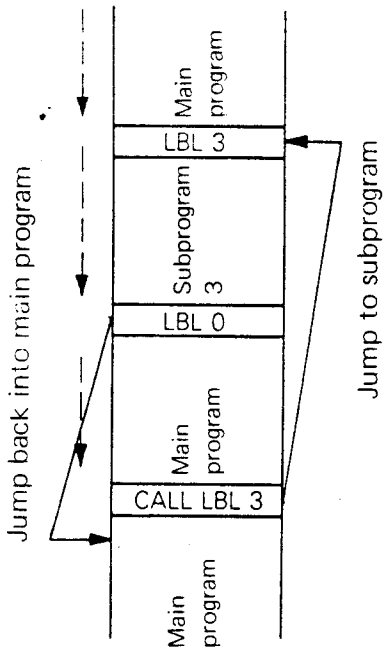

Schematic diagram of a subprogram e.g. subprogram 3

a) The beginning of the subprogram is marked by [LBL SET] 3

b) The end of the subprogram is marked by [LBL SET] 0.

c) The subprogram may be called-up at any program step within the main program by pressing [LBL CALL] i.e. a jump can be made to the appropriate program label.

Nesting of subprograms

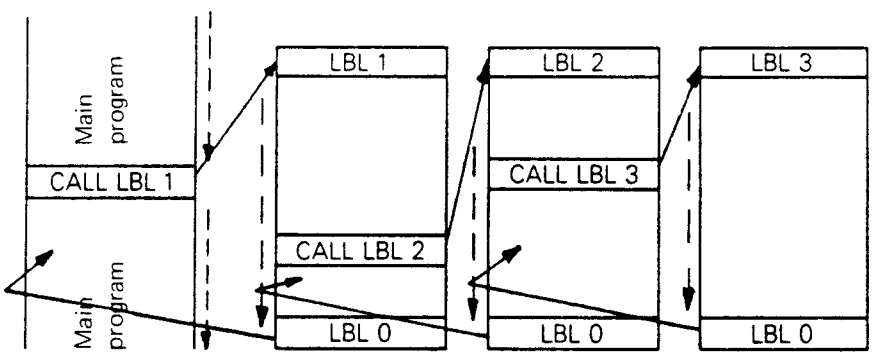

Schematic diagram of subprogram nesting

Subprograms may be nested up to 8 times i.e. up to 8 different subprograms may be interconnected via jump commands within a particular subprogram. Subprograms may also contain program part repeats. If subprograms are nested more than eight times, the following error appears in the dialogue display:

After cancelling and rectifiying this error, a [GO TO] -function must be executed to prevent the error re-appearing with the next jump command.

Program part repeats

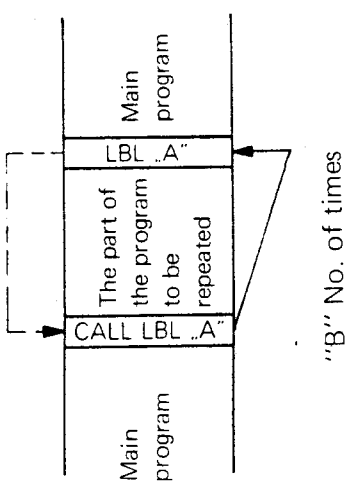

Schematic diagram of a program part repeat

Label No. A = 1 . . . 255

No. of repeats B = 1 . . . 65,535

Example:

A block is to be repeated 10 times -

Dialogue display: REP 10/10

After one repetition the dialogue shows: REP 10/ 9 etc.

Subprogram repeats
Should a subprogram need to be repeated several times, programming is as follows:

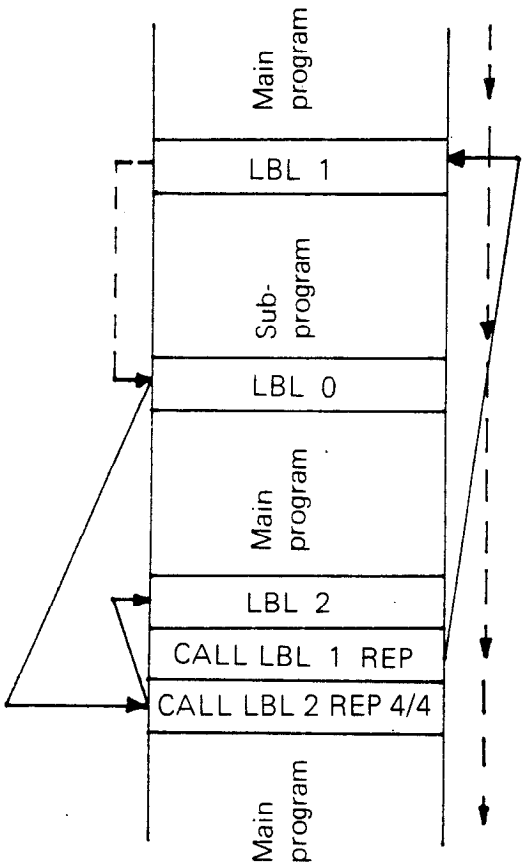

Program mark for subprogram

End of subprogram

Mark for the program part repeat.
Call-up of subprogram.
Call-up of program part repeat.

Note:
If four repeats are programmed, then the subprogram is executed five times.

C 6. Cycle Definition [CYCL DEF]

For general purpose operation, the TNC 131/135 possesses "fixed" programmed cycles for certain recurring machining operations. Furthermore, the programming of **dwell time**, the possibility of entering nominal position values in **polar co-ordinates** (without **tool radius compensation**), and, for machines with individual drives, **simultaneous straight line** traverse in 2 axes, may all be performed via canned cycles:

Cycle 1	=	pecking	
Cycle 2	=	tapping	
Cycle 3	=	slot milling	
Cycle 4	=	pocket milling	
Cycle 5	=	pole	for nominal value entry in polar coords /
Cycle 6	=	polar co-ordinates	no radius compensation
Cycle 9	=	dwell time	
Cycle 0	=	diagonal path	only available on machines with individual drives / without tool radius compensation

Note:
Cycles 5, 6 and 0 are also "executed" during definition: a cycle-call with [CYCL CALL] -key is not required.

Cycles 1, 2, 3, 4 and 9 require a cycle-call.

C 6.1 Selection of a certain cycle

(paging the cycle library)
The cycle definition block is first called-up during programming by pressing the [CYCL DEF] -key. The required cycle may then be selected by "paging" with the [↓] -key (repeated pressing), and finally transferred to the memory by pressing the [ENT] -key. The cycle is then defined according to the dialogue.

C 6.2 Canned cycle "diagonal path"

Note:

.This cycle is only possible with the TNC-version for simultaneous traverse.
.NO cycle-call is required.
.NO tool radius compensation is taken into account during positioning.
.The maximum traversing speed in the diagonal path is limited to half of the lowest programmed rapid traverse of the 3 axes.

Example:

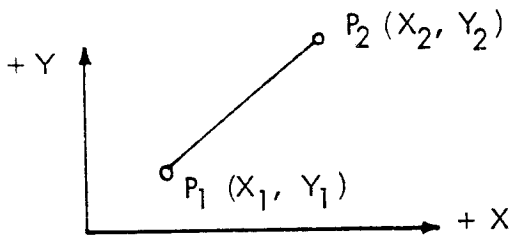

Point P, is already reached in the previous positioning block. The co-ordinates (X_2 and Y_2) are programmed in the "diagonal path" cycle. When the cycle is run, the centre point of the tool moves along a diagonal path from P_1 to P_2 (without radius compensation).

Initiate dialogue with [CYCL DEF]

Dialogue question	Response
CYCLE DEF 0 DIAGONAL PATH	On TNC-versions for simultaneous traverse, this cycle appears in the display immediately after dialogue initiation.
NOMINAL POSITION: FIRST AXIS ?	Enter first co-ordinate (axis and position value) of the nominal position
NOMINAL POSITION: SECOND AXIS ?	Enter second co-ordinate (axis and position value) of the nominal position.
FEED RATE ? F = . . .	Enter feed-rate (see table in section C 3)
AUXILIARY FUNCTION M ?	Enter auxiliary function (see table in section C 3)

The canned cycle "diagonal path" allocates four program blocks. When "paging" the program contents, the following blocks appear in the dialogue display:

... CYCL DEF 0.0 DIAGONAL PATH
... CYCL DEF 0.1 A/I X/Y/Z .... First co-ordinate of nominal position
... CYCL DEF 0.2 A/I X/Y/Z ... Second co-ordinate of nominal position
... CYCL DEF 0.3 F . . . M . . . Feed rate and auxiliary function

C 6.3 Cycle "Pecking"

Provisions for canned cycle:

.a preceding tool call (definition of working spindle axis and spindle speed)

.the direction of spindle rotation must already have been determined in a preceding program block

.the starting position (safety clearance) must already have been reached in the previous positioning block

Example:

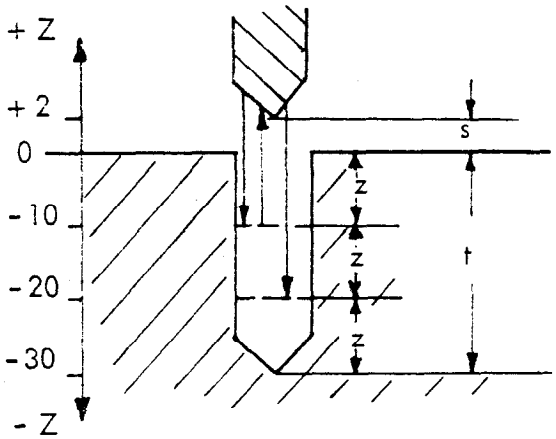

s = set-up clearance (= -2)

(the machine must be traversed incrementally by -2, so that the tip of the tool touches the workpiece surface with absolute value 0)

t = total hole depth (= -30)

z = woodpecking depth (= -10)

Stage 1: The hole is drilled to a depth -12, and the drill returns in rapid traverse to position +2 in the z-axis.

Stage 2: Rapid traverse to position -11; the hole is drilled to -24 at the given feed rate, and the drill returns in rapid traverse to position +2 in the z-axis.

Stage 3: Rapid traverse to position -23; the hole is drilled to -30 at the given feed rate. When the total hole depth is reached, the dwell time commences (for cut-free of drill) and the drill then returns to the starting position +2.

Initiate dialogue with [CYCL DEF]

If required, press the [↓] -key (with the TNC-version for simultaneous traverse).

Dialogue question	Response
CYCLE DEF 1 PECKING	
SET-UP CLEARANCE ?	Enter set-up clearance with correct sign* (already reached in the previous positioning block)
TOTAL HOLE DEPTH ?	Enter total hole depth with correct sign.*
WOODPECKING DEPTH ?	Enter woodpecking depth with correct sign.*
DWELL TIME (SECS) ?	Enter dwell time for cut-free of drill.
FEED RATE ? F = . . .	Enter feed rate (see table in section C 3)

*The set-up clearance, the total hole depth and the woodpecking depth must all have the same arithmetical sign.

The canned cycle "Pecking" allocates six program blocks. When "paging" the program contents, the following blocks appear in the dialogue display:

... CYCLE DEF 1.0 PECKING ...	
... CYCLE DEF 1.1 SET UP ...	set-up clearance
... CYCLE DEF 1.2 DEPTH ...	total hole depth
... CYCLE DEF 1.3 PECKING ...	woodpecking depth
... CYCLE DEF 1.4 DWELL ...	dwell time
... CYCLE DEF 1.5 F ...	feed rate

C 6.4 Cycle "Tapping"

Provisions for canned cycle:

.a preceding tool call (definition of working spindle axis and spindle speed)

.the direction of spindle rotation must already have been determined in a preceding program block. (M 03 for right-hand thread / M 04 for left-hand thread).

.the starting position (safety clearance) must already have been reached in the previous positioning block

Calculation of the feed rate for cycle definition "tapping":

$$\text{Feed rate}\left[\text{mm/min}\right] = \text{spindle speed}\left[\text{rpm}\right] \bullet \text{thread pitch}\left[\text{mm}\right]$$

As the length compensation chuck can only normally compensate for the feed rate difference between the calculated and the programmed feed rate when in motion, the next smallest feed rate value in the table (see section C 3) must be programmed.

Example:

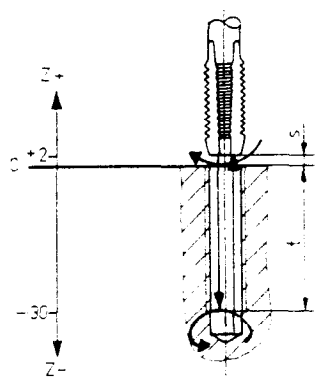

s = set-up clearance (=-2)

t = total hole depth (=-30)

The thread is cut in one plunge when the total hole depth is reached. The direction of rotation of the spindle is automatically reversed after 1 second. The dwell time now begins to run - the compensation chuck is re-centred. The tapping tool then returns to the starting point.

Initiate dialogue with [CYCL DEF]

Press [↓] until cycle "tapping" appears in the dialogue display.

Dialogue question	Response
CYCLE DEF 2 TAPPING	
SET-UP CLEARANCE ?	Enter set-up clearance with correct sign * (already reached in the previous positioning block)
TOTAL HOLE DEPTH ?	Enter total hole depth with correct sign *
DWELL TIME (SECS) ?	Enter dwell time between the reverse of the direction of spindle rotation, and the return of the tapping tool to the starting position.
FEED RATE ? F = . . .	The programmed feed rate must be smaller than the feed rate calculated from the spindle speed and the thread pitch.

*The set-up clearance and the total hole depth must have the same arithmetical sign.

The canned cycle "tapping" allocates five program blocks. When "paging" the program contents, the following blocks appear with dialogue display:

... CYCLE DEF 2.0 TAPPING	
... CYCLE DEF 2.1 SET-UP...	set-up clearance
... CYCLE DEF 2.2 DEPTH ...	total hole depth
... CYCLE DEF 2.3 DWELL ...	dwell time
... CYCLE DEF 2.4 F ...	feed rate

C 6.5 Cycle "Slot milling"

Provisions for canned cycle:

.a preceding tool call (definition of working spindle axis and spindle speed)

.the direction of spindle rotation must already have been determined in a preceding program block.

.the starting position (tool with set-up clearance located over workpiece at the starting point of the slot) must already have been determined in preceding blocks.

.the slot must be wider than the diameter of the milling cutter.

Machining operation:

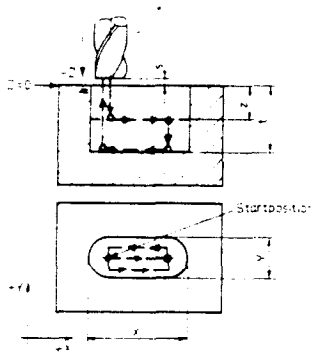

s = set-up clearance

z = woodpecking depth

t = milling depth

x = first co-ordinate

y = second co-ordinate

1. Roughing: The milling cutter penetrates the workpiece at half the feed rate until it reaches the first woodpecking depth. The first rough cut is then made into the work.
   The second plunge is carried out at the other end of the slot.

2. Finishing: The milling cutter now performs the final finishing cut and then starts on the final contour of the slot with down-cut milling.

Note:

The starting point of the slot must be reached **with radius compensation R+ or R-!**

Initiate dialogue with [CYCL DEF] .

Press [↓] -key until cycle "slot milling" appears in dialogue display.

Dialogue question	Response
CYCL DEF 3 SLOT MILLING	
SET-UP CLEARANCE ?	Enter set-up clearance with correct sign * (already reached in the previous positioning block).
MILLING DEPTH ?	Enter milling depth with correct sign *
WOODPECKING DEPTH ?	Enter woodpecking depth with correct sign *
FIRST SIDE LENGTH ?	Enter numerical value for length of slot with correct arithmetical sign (the direction of the slot in relation to the starting point must be established).
SECOND SIDE LENGTH ?	Enter width of slot (always a positive value).
FEED RATE ? F . . .	Enter longitudinal feed rate. The milling cutter will penetrate the work-piece at half the longitudinal feed rate.

*The set-up clearance, woodpecking depth and milling depth must all have the same arithmetical sign.

The canned cycle "slot milling" allocates seven program blocks. When "paging" the program contents, the following blocks appear in the dialogue display:

... CYCL DEF 3.0 SLOT MILLING	
... CYCL DEF 3.1 SET-UP ...	set-up clearance
... CYCL DEF 3.2 DEPTH ...	milling depth
... CYCL DEF 3.3 PECKG ...	woodpecking depth
... CYCL DEF 3.4 X/Y/Z ...	length of slot
... CYCL DEF 3.5 X/Y/Z ...	width of slot
... CYCL DEF 3.6 F . . .	feed rate

C 6.6 Cycle "Pocket milling"

Provision for canned cycle:

.a preceding tool call (definition of working spindle axis and spindle speed)

.the direction of spindle rotation must already have been determined in a preceding program block

.the starting position (tool with set-up clearance located over workpiece at centre of pocket) must already have been determined in preceding blocks

Machining operation:

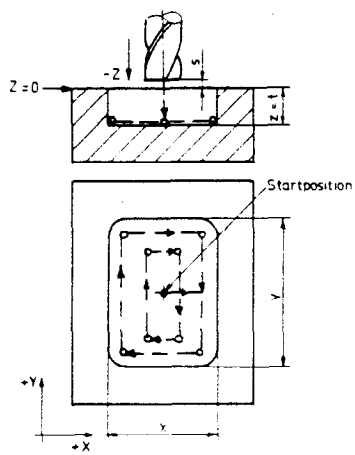

s = set-up clearance

z = woodpecking depth

t = depth of pocket

x = first co-ordinate

y = second co-ordinate

After penetrating the workpiece, the cutter follows a spiral path which is parallel to the parameter limits of the pocket. The tool is always displaced by $\frac{D}{1,2}$ (D = diameter of the milling cutter) to the edge limits.

If the pocket may not be milled in one plunge due the cutting force being too high, this can be overcome by using the woodpecking facility.

The milling procedure is repeated until the final pocket depth is reached.

Initiate dialogue with [CYCL DEF]

Press the [↓] -key until cycle "pocket milling" appears in dialogue display:

Dialogue question	Response
CYCLE DEF 4 POCKET MILLING	
SET-UP CLEARANCE ?	Enter set-up clearance with correct sign * (already reached in the previous positioning block)
MILLING DEPTH ?	Enter milling depth with correct sign *.
WOODPECKING DEPTH ?	Enter woodpecking depth with correct sign *.
FIRST SIDE LENGTH ?	Enter length of first side (positive value)
SECOND SIDE LENGTH ?	Enter length of second side (positive value)
FEED RATE ? F . . .	Enter longitudinal feed rate. The milling cutter will penetrate the workpiece at half the longitudinal feed rate.

*The set-up clearance, the milling depth and the woodpecking depth must all have the same arithmetical sign.

The canned cycle "pocket milling" allocates seven program blocks. When "paging" the program contents, the following blocks appear in the dialogue display:

... CYCLE DEF 4.0 POCKET MILLING	
... CYCLE DEF 4.1 SET-UP ...	set-up clearance
... CYCLE DEF 4.2 DEPTH ...	milling depth
... CYCLE DEF 4.3 PECKG ...	woodpecking depth
... CYCLE DEF 4.4 X/Y/Z ...	length of first side
... CYCLE DEF 4.5 X/Y/Z ...	length of second side
... CYCLE DEF 4.6 F ...	feed rate

C 6.7 Cycle "Pole" / "Polar co-ordinates"

The cycles "pole" and "polar coord" enable positions to be entered in polar co-ordinates (however, only without tool radius compensation). These cycles are especially suitable for efficient programming of e.g.:
.holes on a pitch circle (on all TNC-versions)
.polygons, spiral shaped paths etc. (only on TNC-versions for individual drives).

Example:

holes on pitch circle

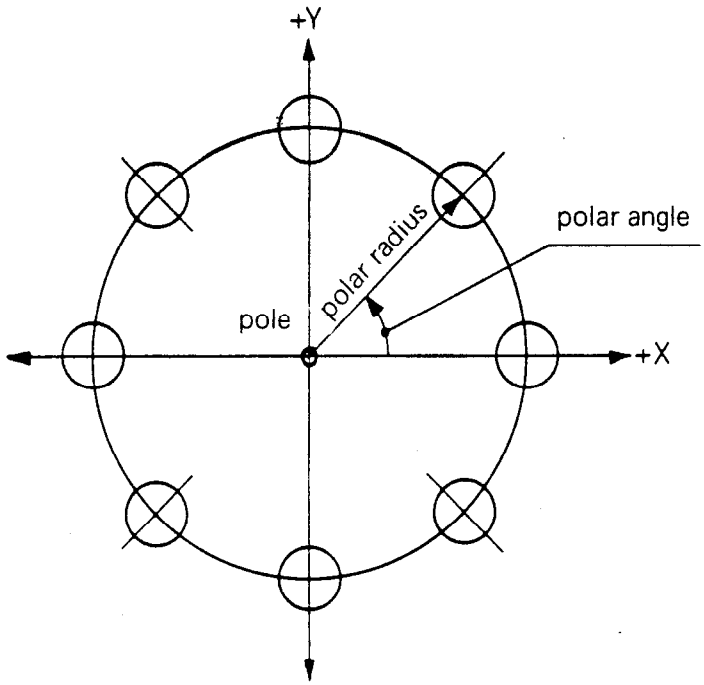

The centre of the pitch circle is defined in the "pole" cycle and is stored by the TNC.

The position to be located on the pitch circle is established by using polar co-ordinates (polar radius, polar angle). It is determined by the intersection of the pitch circle with the radius P.R. and the foot of the angle P.W.

The cycles "pole" and "polar coord" **do not require a cycle call.**

Note:
The programmed nominal position value is located on a "diagonal path" by TNC-versions for simultaneous traverse, whereas on TNC-versions for common drive, the co-ordinates of the nominal position are located axis-parallel on a rectangular traverse.

Cycle "Pole"
This cycle must be defined before the "polar coord." cycle.

Initiate dialogue with [CYCL DEF]

Press the [↓] -key until cycle "pole" appears in the dialogue display:

Dialogue question	Response
CYCLE DEF 5 POLE	
POLE FIRST CO ORDINATE	Enter first co-ordinate of the centre point of the pitch circle (in absolute or incremental dimensions)
POLE SECOND CO-ORDINATE	Enter second co-ordinate of the centre point of the pitch circle (in absolute or incremental dimensions)

The canned cycle "pole" allocates three program blocks. When "paging" the program contents, the following blocks appear in the dialogue display:

... CYCL DEF 5.0 POLE
... CYCL DEF 5.1 A/I X/Y/Z ... First co-ordinate of pole
... CYCL DEF 5.2 A/I X/Y/Z ... Second co-ordinate of pole

Cycle "Polar co-ordinate"
With the cycle "polar co-ordinate", positions are established relative to the pole by means of the polar radius (P.R.) and the polar angle (P.W.).

Note:
No tool radius compensation is taken into account during positioning.

Definition of planes and 0° -axes.

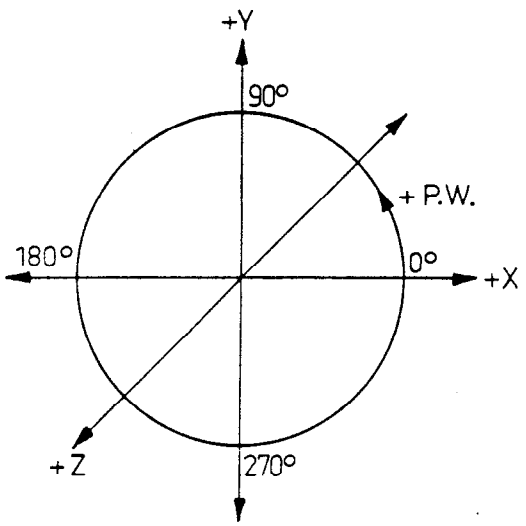

In the X/Y plane, the 0° -axis is located on X+.

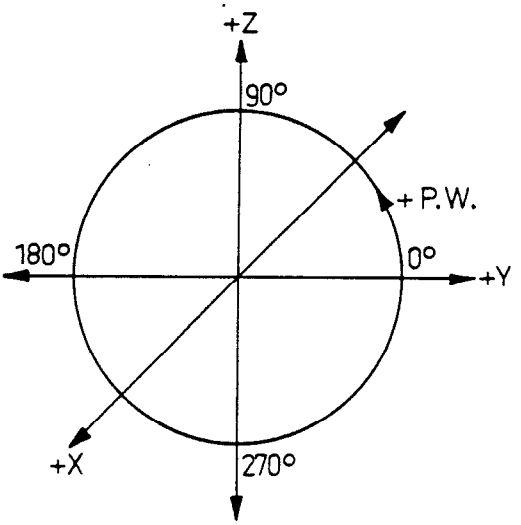

In the X/Z plane, the 0° -axis is located on Y+.

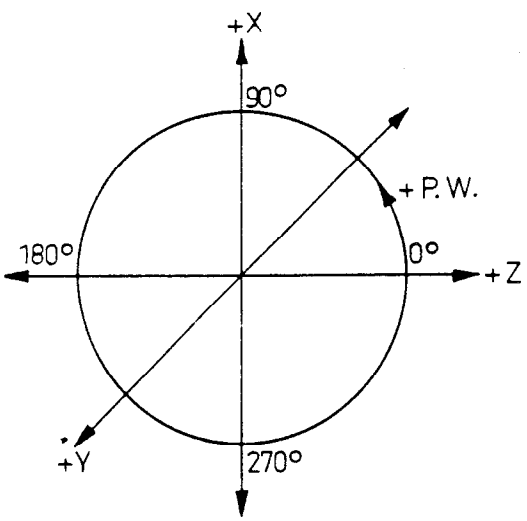

In the Z/X plane, the 0° -axis is located on Z+.

Initiate dialogue with [CYCL DEF]

Press the [↓] -key until cycle "polar co-ordinate" appears in the dialogue display:

Dialogue question	**Response**
CYCLE DEF 6 POLAR COORD.	
POLAR RADIUS	Enter the polar radius in absolute or incremental dimensions. **Note:** If a negative radius is entered, then the programmed position is reflected symmetrically about the centre. 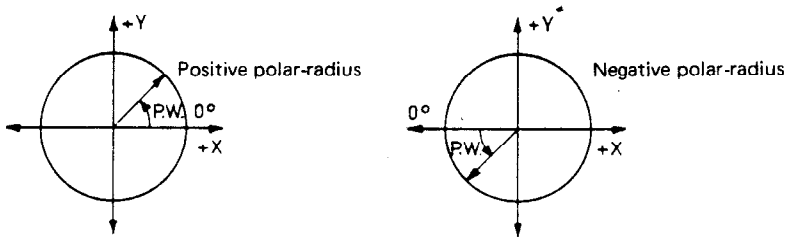
POLAR ANGLE	Enter the polar angle as an absolute - or incremental-angle. A positive angle indicates rotation counter-clockwise: a negative angle indicates rotation clockwise.
FEED RATE ? F = . . .	Enter the feed rate
AUXILIARY FUNCTION M ?	Enter the auxiliary function.

The canned cycle "polar coord" allocates four program blocks. When "paging" the program contents, the following blocks appear in the dialogue display:

... CYCL DEF 6.0 POLAR COORD.
... CYCL DEF 6.1 A/I P.R. ... polar radius
... CYCL DEF 6.2 A/I P.W. ... polar angle
... CYCL DEF 6.3 F . . . feed rate

C 6.8 Cycle "Dwell time"

A dwell time must be programmed whenever a stop of the drive is required for a given period of time during a program run (e.g. cut-free operation).

Initiate dialogue with [CYCL DEF]

Press the [↓] -key until cycle "dwell time" appears in the dialogue display:

Dialogue question	Response
CYCL DEF 9 DWELL TIME	
DWELL TIME (SECS) ?	Enter the required dwell time.

Canned cycle "dwell time" allocates two program blocks. When "paging" the program contents, the following blocks appear in the dialogue display:

... CYCL DEF 9.0 DWELL TIME
... CYCL DEF 9.1 DWELL ... dwell time

C 7. Cycle call [CYCL CALL]

Initiate dialogue with [CYCL CALL]

Note:
Canned cycles 0 = "diagonal path" and 6 = "polar-coord." do not require a cycle call.
All other canned cycles must be called-up with a cycle-call block. **Only the last defined canned cycle** may be called-up during program run with [CYCL CALL] .

Dialogue question	Response
AUXILIARY FUNCTION – M ?	Enter the auxiliary function.

A cycle call only requires one program block:

...	CYCLE CALL	M .....
Block number	Cycle call	Code number for auxiliary function

Programming via keyboard

D 1. Programming to program sheet or drawing

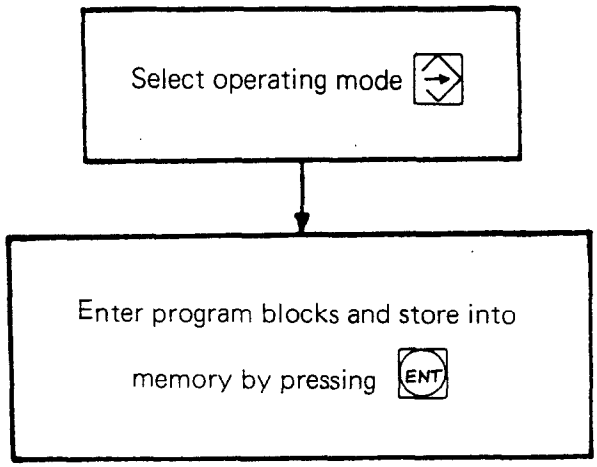

D 2. Programming whilst machining first workpiece (Teach-in)

D 2.1 Programming of tool definition

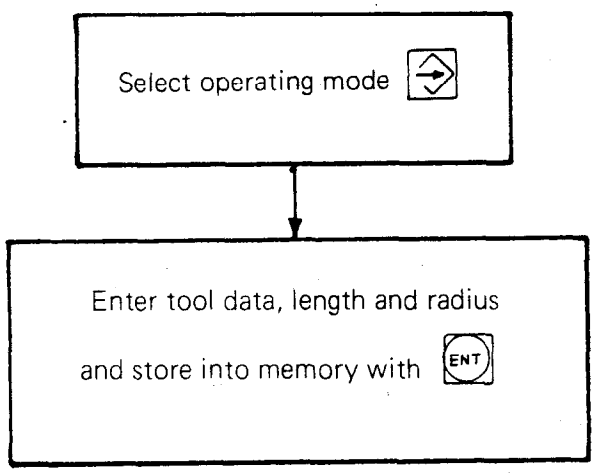

D 2.2 Programming of tool call

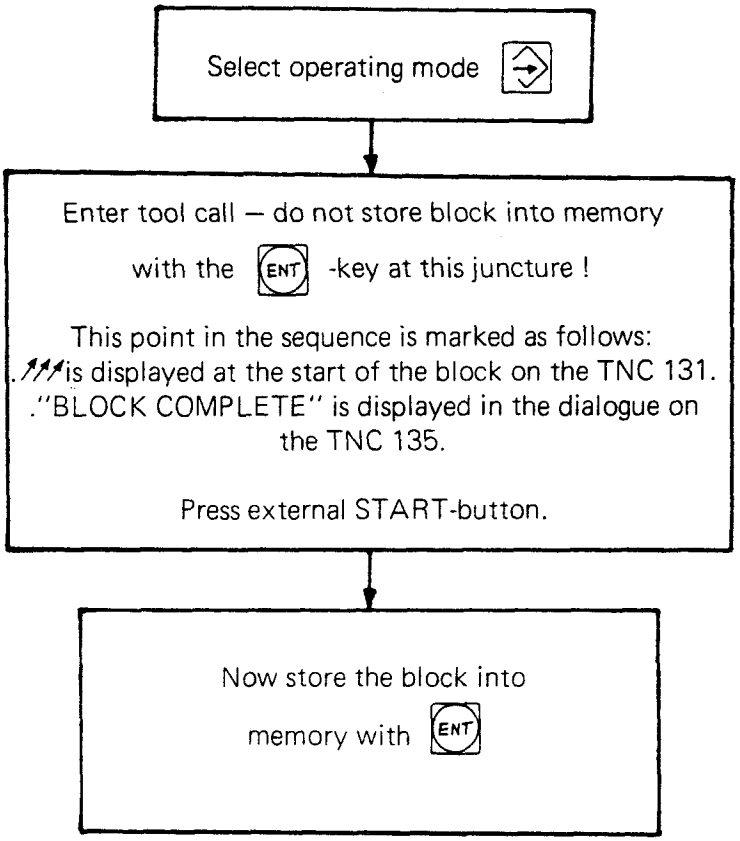

D 2.3 Programming of positioning block

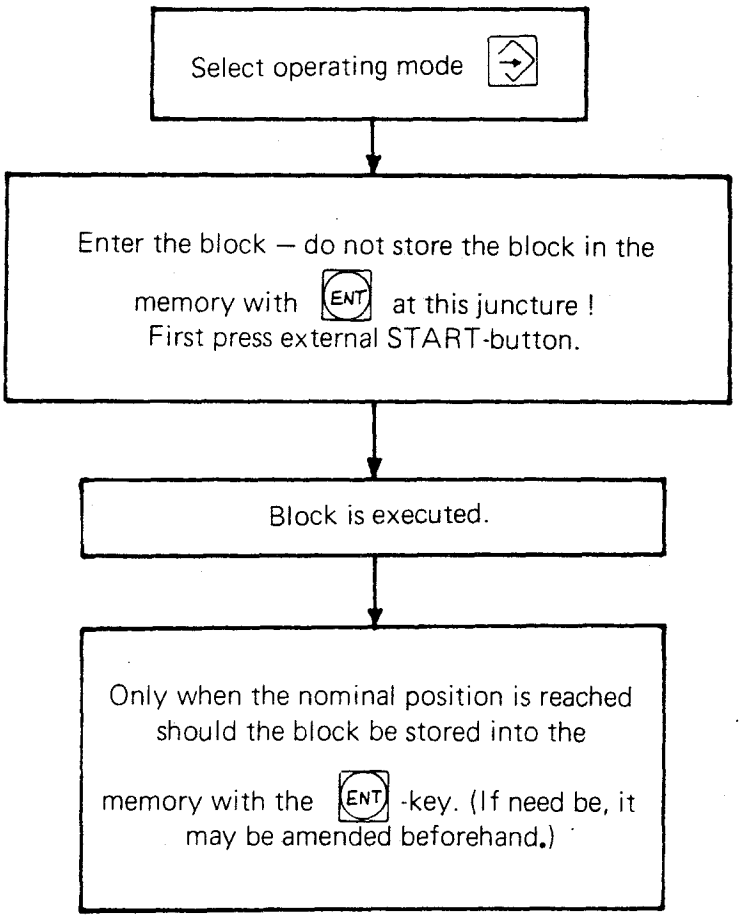

D 2.4 Programming of cycle definition

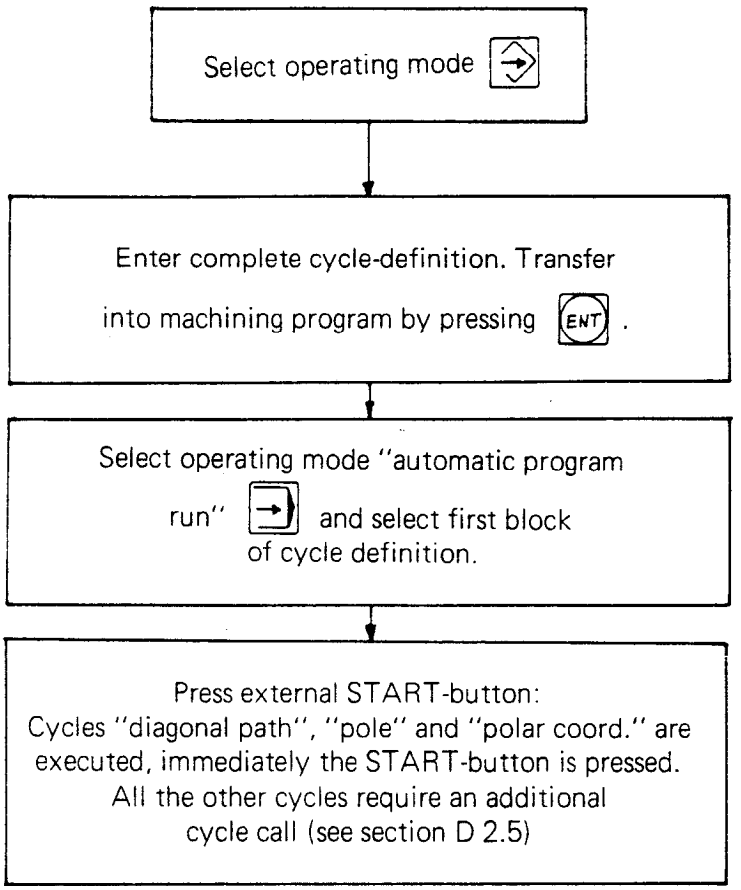

Note:
For cycles which are executed with a cycle call, the cycle definition should be activated by pressing the START-button in the operating mode .

D 2.5 Calling-up of a canned cycle

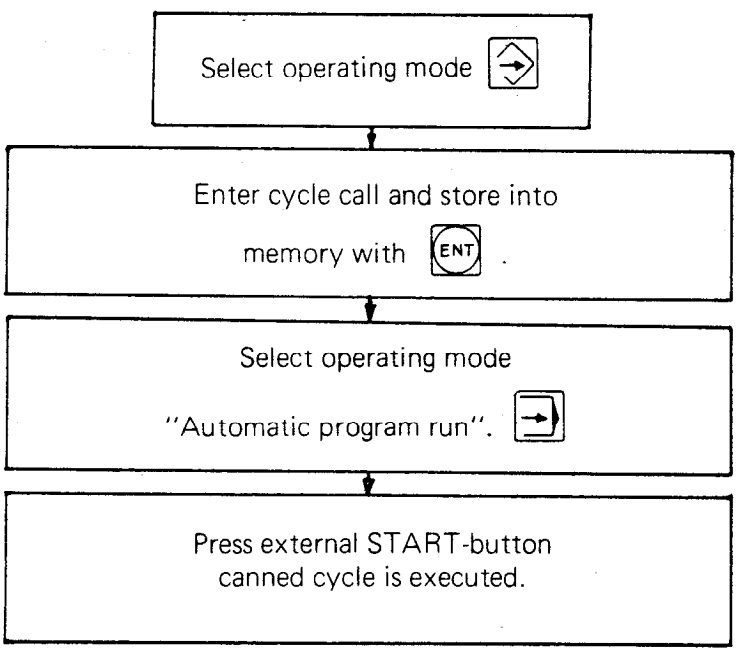

D 2.6 Subprograms and program part repeats

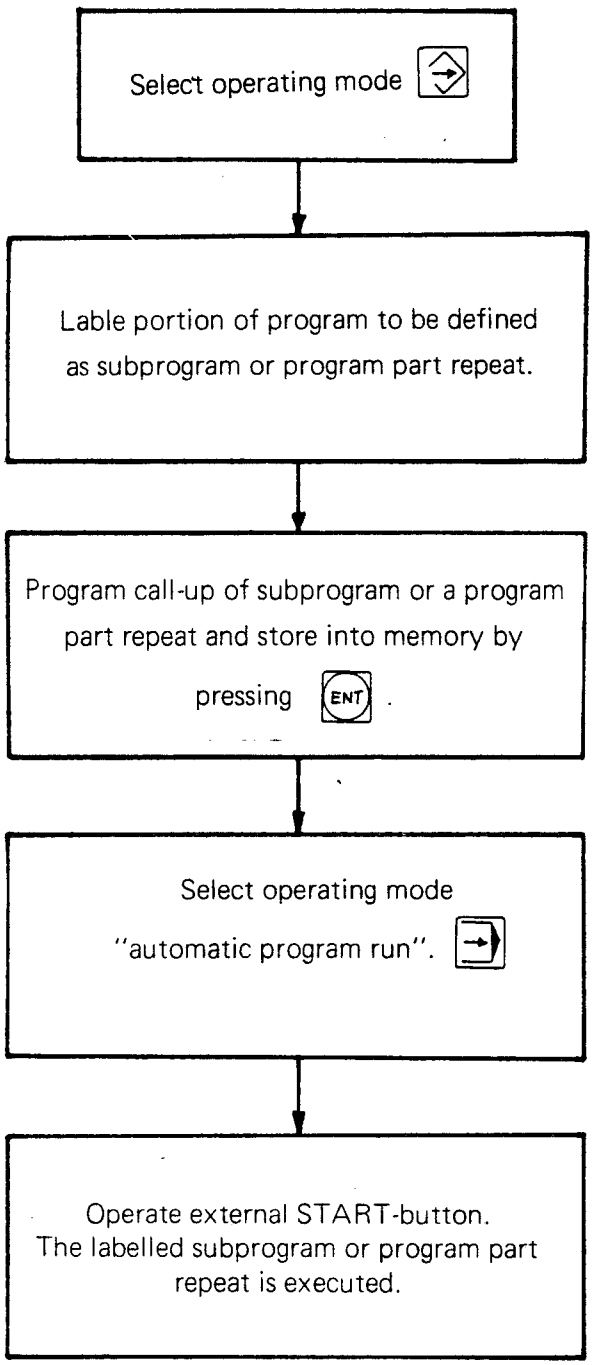

D 3. Programming of a positioning block using the "actual position data transfer" key (Playback)

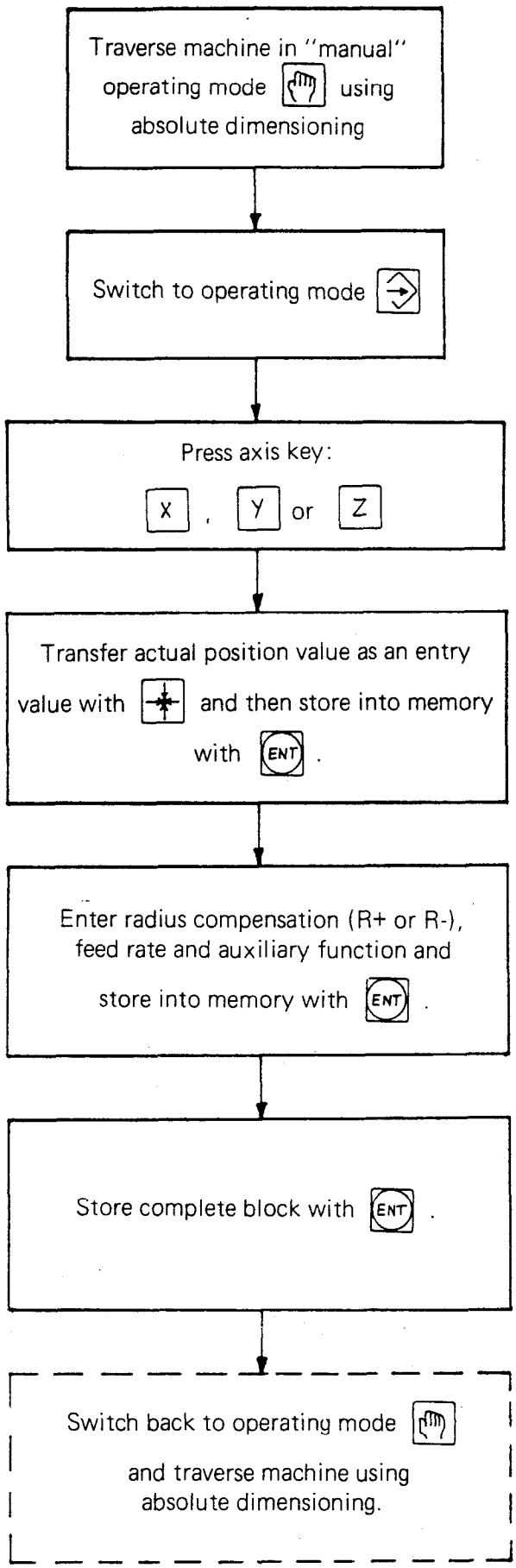

E 1. Interface

The TNC 131/135 control has a data interface according to the

CCITT recommendation V.24
and EIA-standard RS-232-C.

This databus enables the connection of a HEIDENHAIN magnetic tape unit ME 101 or ME 102. However, other programming – or peripheral devices (e.g. a tape punching or reading unit, a teletype or a printer) may also be connected to the TNC 131/135, if they have a V.24 compatible connection (peripheral devices with a 20mA-interface may not be connected).

The following HEIDENHAIN connecting cables are available:

a) **Adapter cable** for connecting the V.24-databus of the TNC with the housing, in which the control is installed.
Data transfer cable for connection of the ME 101.

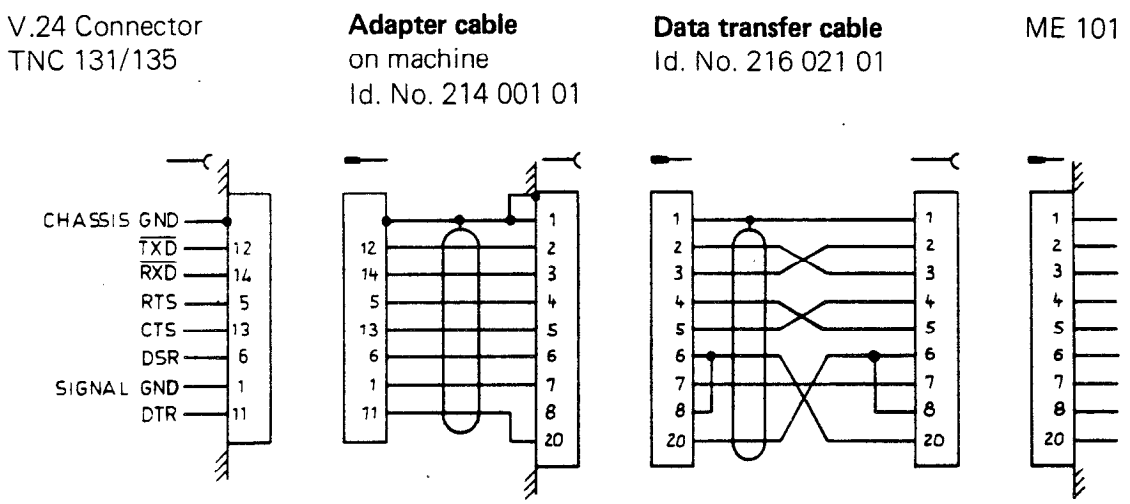

b) **Connecting cable** for direct connection of ME 102 to TNC.

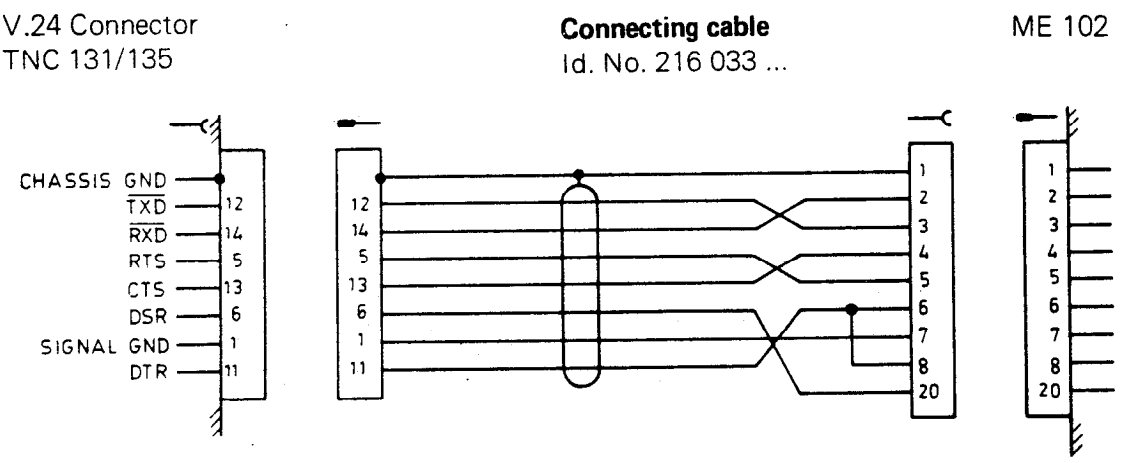

c) **Adapter cable** for connecting the V.24-connection on the ME 102 with the housing, in which the control and the ME 102 are installed.

ME 102
PRT connection terminal

Adapter cable
to machine
Id. No. 217 707 01

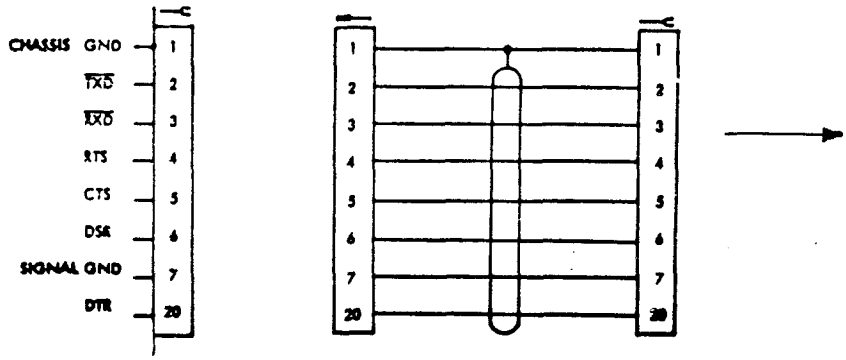

The following terminal layout illustrates the connection of another peripheral device (e.g. printer with tape reading and punching unit).

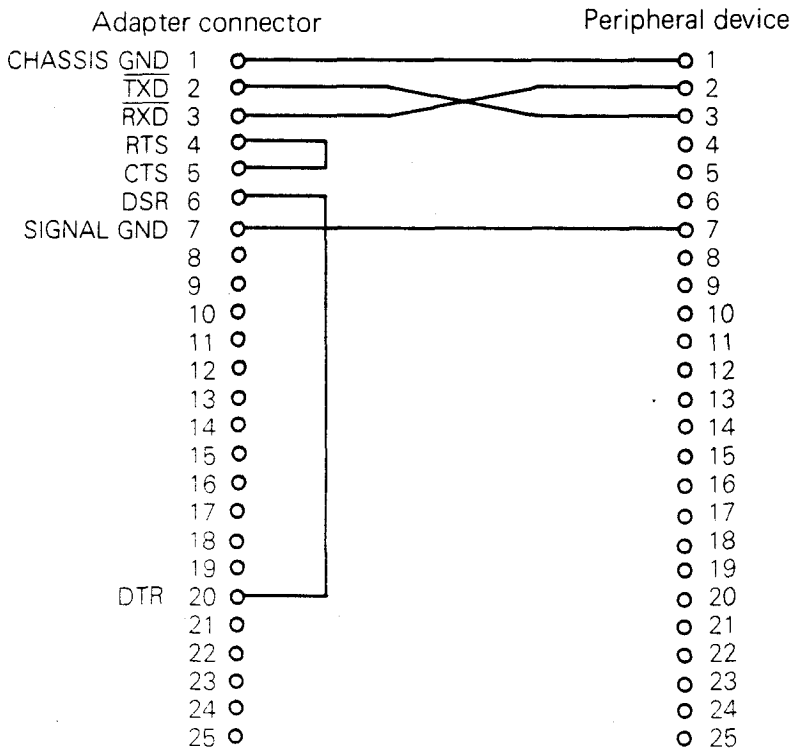

Key to signal symbols:

$\overline{\text{TXD}}$	Transmit data
$\overline{\text{RXD}}$	Receive data
RTS	Request to send
CTS	Clear to send
DSR	Data set ready
DTR	Terminal ready

Note:
The peripheral device must be set to even-parity.

E 2. HEIDENHAIN magnetic tape cassette units type ME 101 and ME 102

HEIDENHAIN offers the following special magnetic tape cassette units for external data storage:

ME 101 – portable unit for alternate use on several machines.
ME 102 – pendant type for permanent installation on one machine.

Magnetic tape units ME 101 and ME 102 are each equipped with two data input and – output terminals.

Apart from the TNC control, a typical peripheral device may also be connected to the V.24 (RS-232-C) output of the ME (PRT connection).

The data-transfer rate between the control and the ME has been set to 2400 Baud. The transfer rate between the ME and a peripheral device may be adjusted as required using a stage switch (110, 150, 300, 600, 1200, 2400 Baud). Detailled information concerning operation of the magnetic tape units may be found in the operating manual for the ME 101 and ME 102.

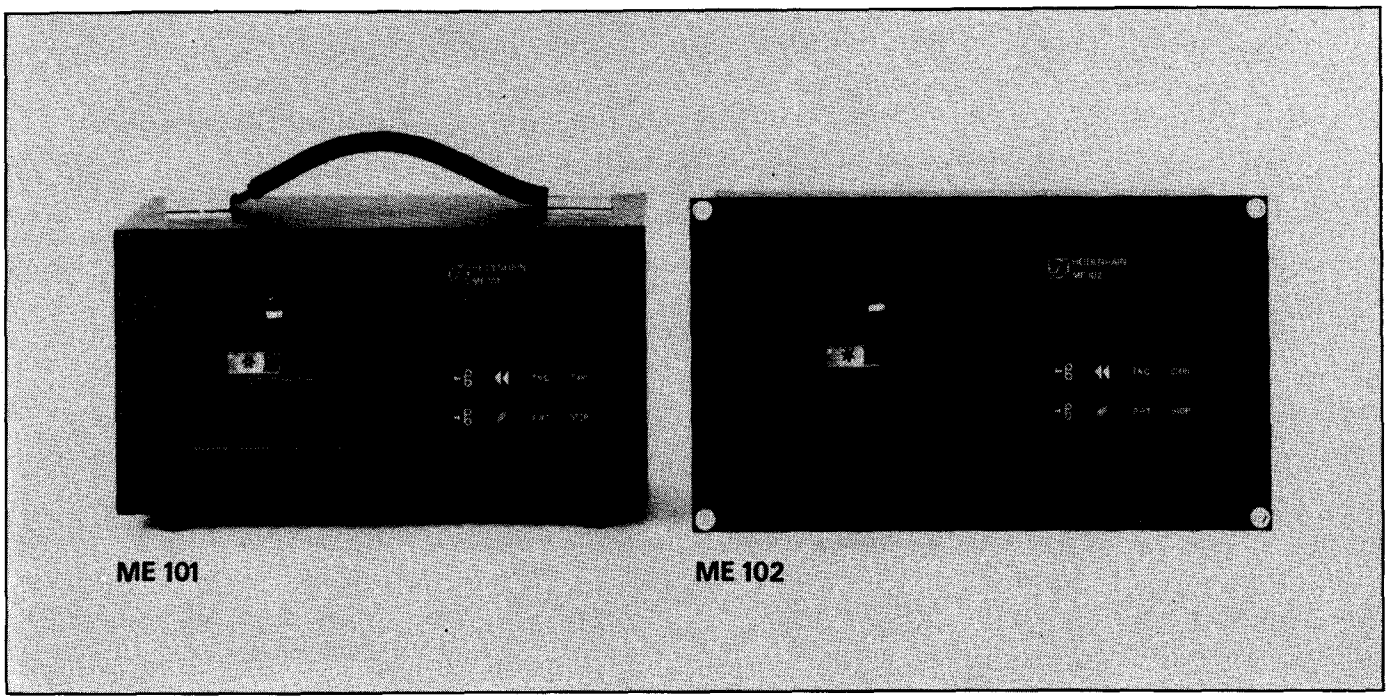

E 3. Entry of Baud rate

The transfer rate between the TNC 131/135 and external data devices is automatically set to 2400 Baud – adapted to the HEIDENHAIN magnetic tape units ME 101 and ME 102.

If a peripheral device with a different Baud rate is connected to the TNC 131/135 (without intermediate connection of the ME), then the Baud rate in the TNC 131/135 must be reprogrammed.

To alter the Baud rate, first switch to operating mode [hand] .

Initiate dialogue with [EXT]

Dialogue question	Response
BAUD RATE = ...	If reqd., key-in new Baud rate (11, 150, 300, 600, 1200, 2400 Baud) and store into memory with [ENT] . If the Baud rate is only to be displayed for checking, then the display should be cleared again with [DEL] after the dialogue has been initiated with [EXT] .

If the control is switched off with discharged or missing buffer batteries, then the programmed data transfer rate is erased and automatically reset to 2400 Baud when the control is switched on again.

E 4. Operating sequence during data transfer

Data output to a printer, a tape punching unit, or a magnetic tape unit type ME 101/ME 102.

The TNC 131/135 automatically issues the following commands (for print-out in lines).

CR	Carriage Return
LF	Line feed
SP	Space
ETX	End of Text

When programs are stored on punched tape, these symbols are contained in the tape — for storage with ME 101/ME 102, they also present on the magnetic tape.

Commencing data transfer with TNC 131/135

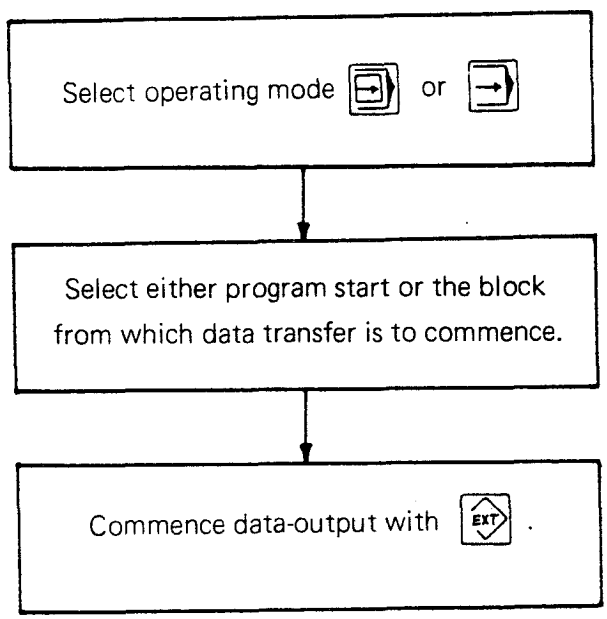

External input of a machining program into TNC 131/135

Before program entry into the TNC, the program memory must be cleared:

During external program entry, the program blocks in the memory are overwritten with new information and it may be possible that small portions of the "old" program will remain stored in the memory.

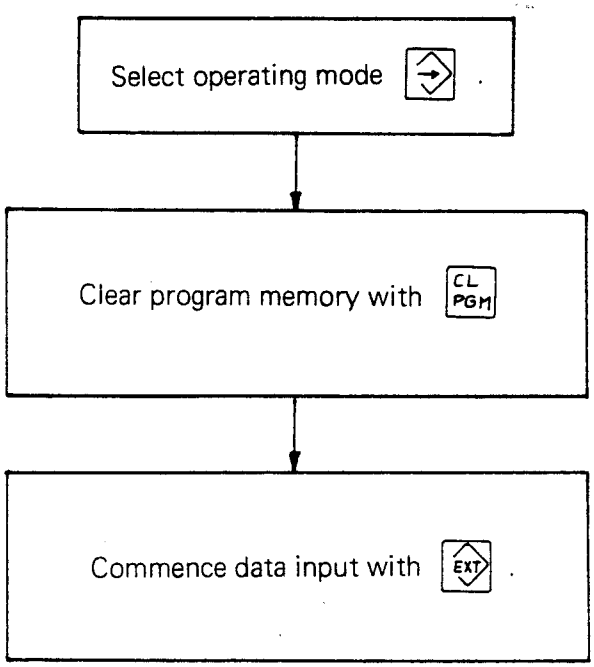

E 5. External program preparation on a terminal

During the development of the HEIDENHAIN control, much emphasis was laid on user-programmability and certain deviations from the NC-standards were adopted (e.g. no G-functions need be programmed). However, machining programs may also be prepared externally — e.g. on a terminal with a tape punching unit — to avoid machine standstill time during program preparation.

When programming externally the following points should be noted:

a) A program must be started with the symbols CR (Carriage Return) and LF (Line Feed). Both symbols must appear before the first block, otherwise this block will be omitted during input from the punched-tape.

b) Each program block must be completed with CR and LF.

c) ETX (End of Text) should be entered after the last program block.

d) Each block must contain all the information requested by the dialogue display during manual programming.

e) The No. of spaces between symbols may be chosen at random.

f) In order to be able to recognize errors in data transfer, the external programming device must be switched to "Even Parity".

F 1. Recall of a certain program block

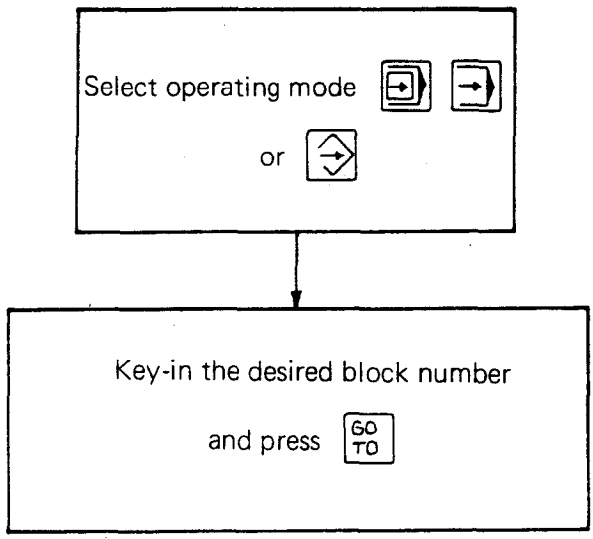

F 2. Checking of program block-by-block

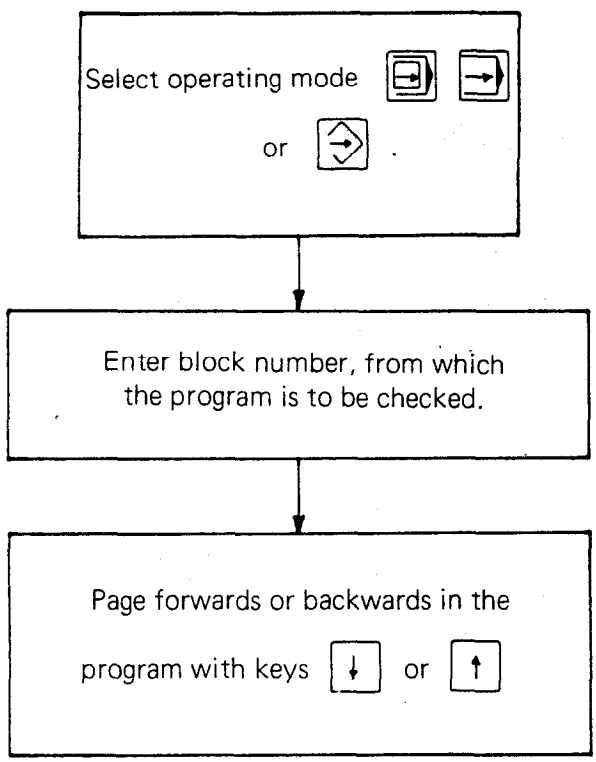

F 3. Deleting a program block

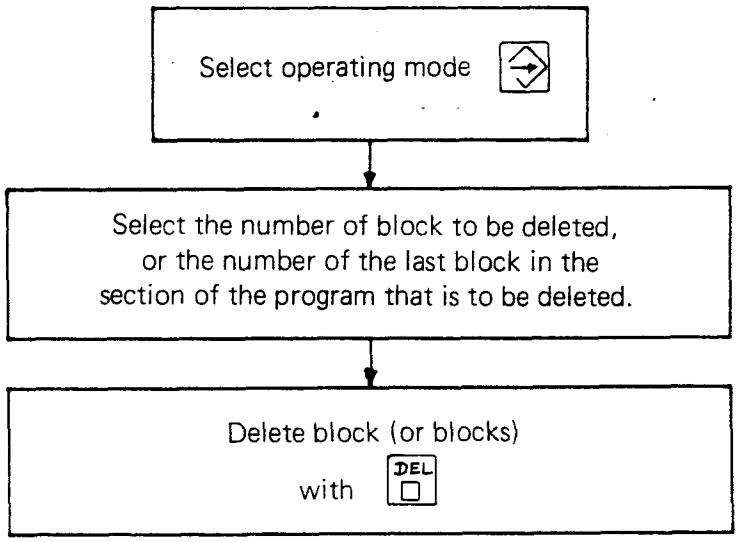

To delete tool or cycle definition blocks, the DEL -key should be pressed the appropriate number of times according to the number of blocks in the definition. Should, for example, a previously programmed canned cycle "pecking" (6 program blocks) need to be deleted, then the last block of the cycle should be selected and the DEL -key pressed 6 times. The block numbers of the subsequent section of the program are automatically shifted.

F 4. Insertion of a program block into an existing program

On the TNC 131/135, new program blocks may be inserted at any random location in an existing program. Simply select the block, before which the new program block is to be inserted; the block to be inserted need only now be entered: the block numbers of the subsequent program blocks are shifted automatically. If the storage capacity of the program memory is exceeded, then this is indicated in the dialogue display by "PROGRAM MEMORY EXCEEDED".

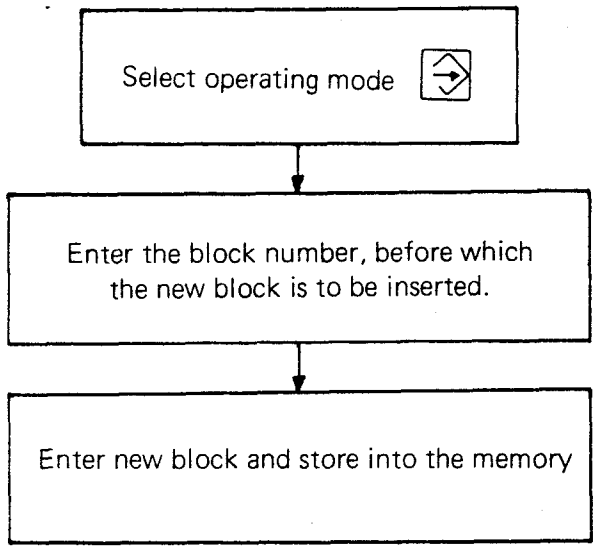

F 5. Editing of "program words" within a block

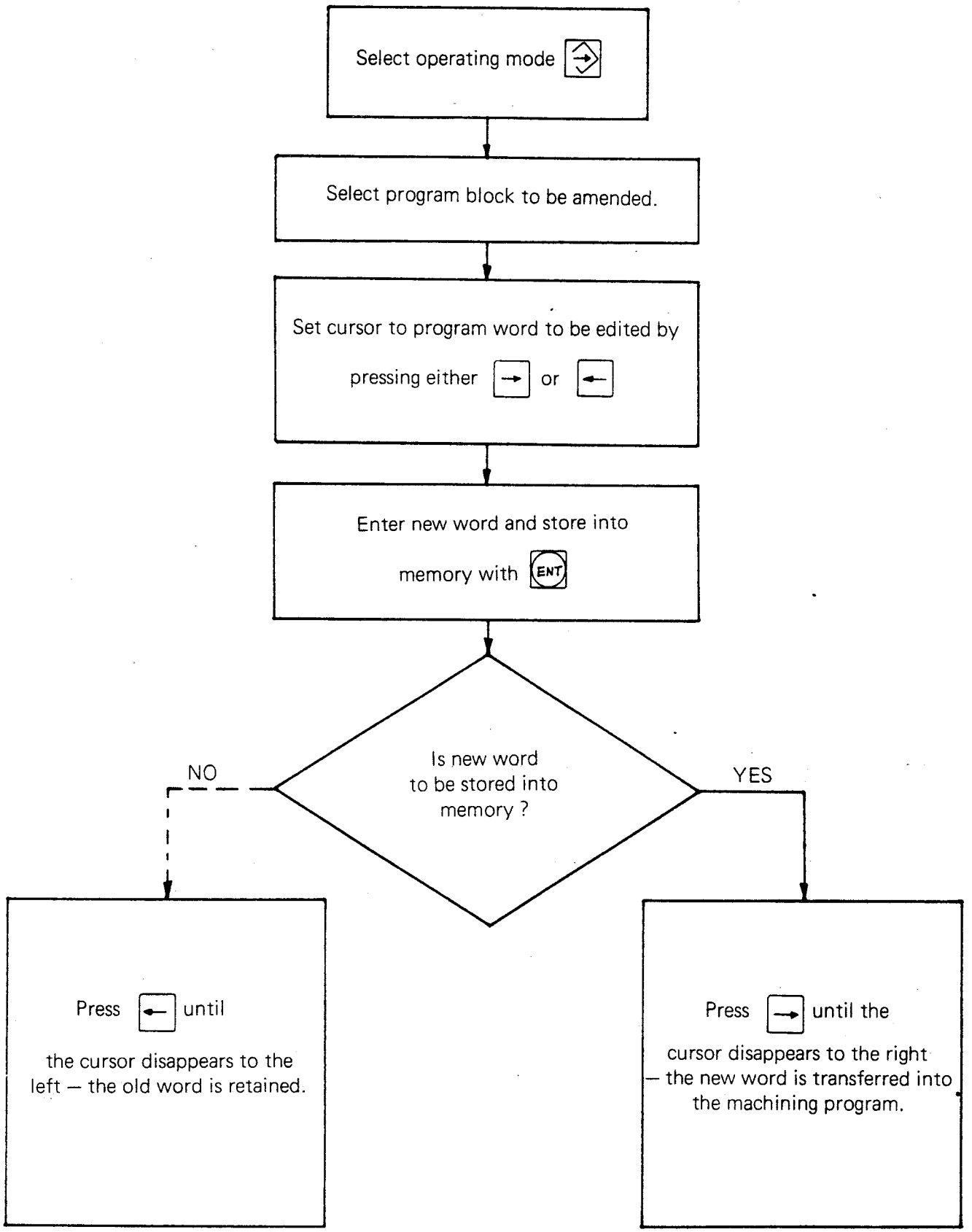

Please note:
The setting of the cursor is initiated with the → -key !

F 6. Search routine for recognizing blocks with common criterea

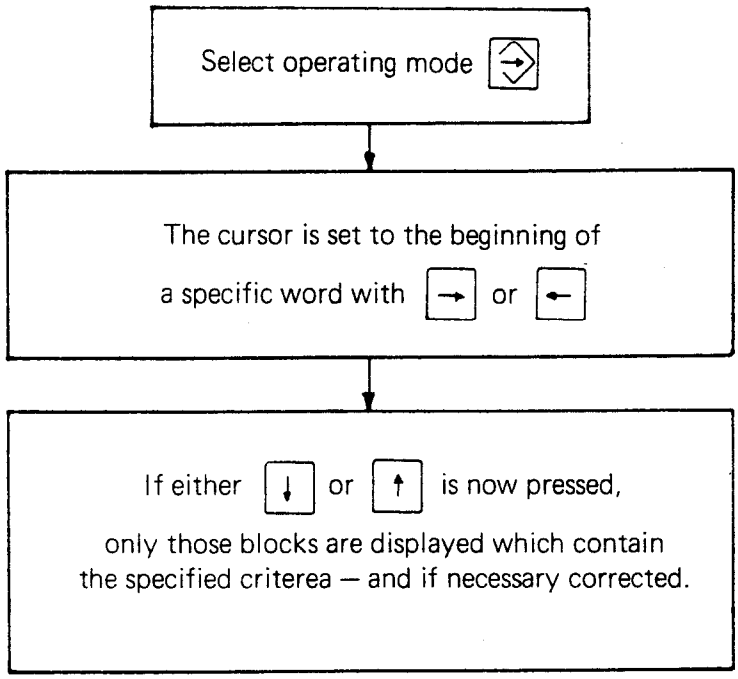

F 7. Clearing program

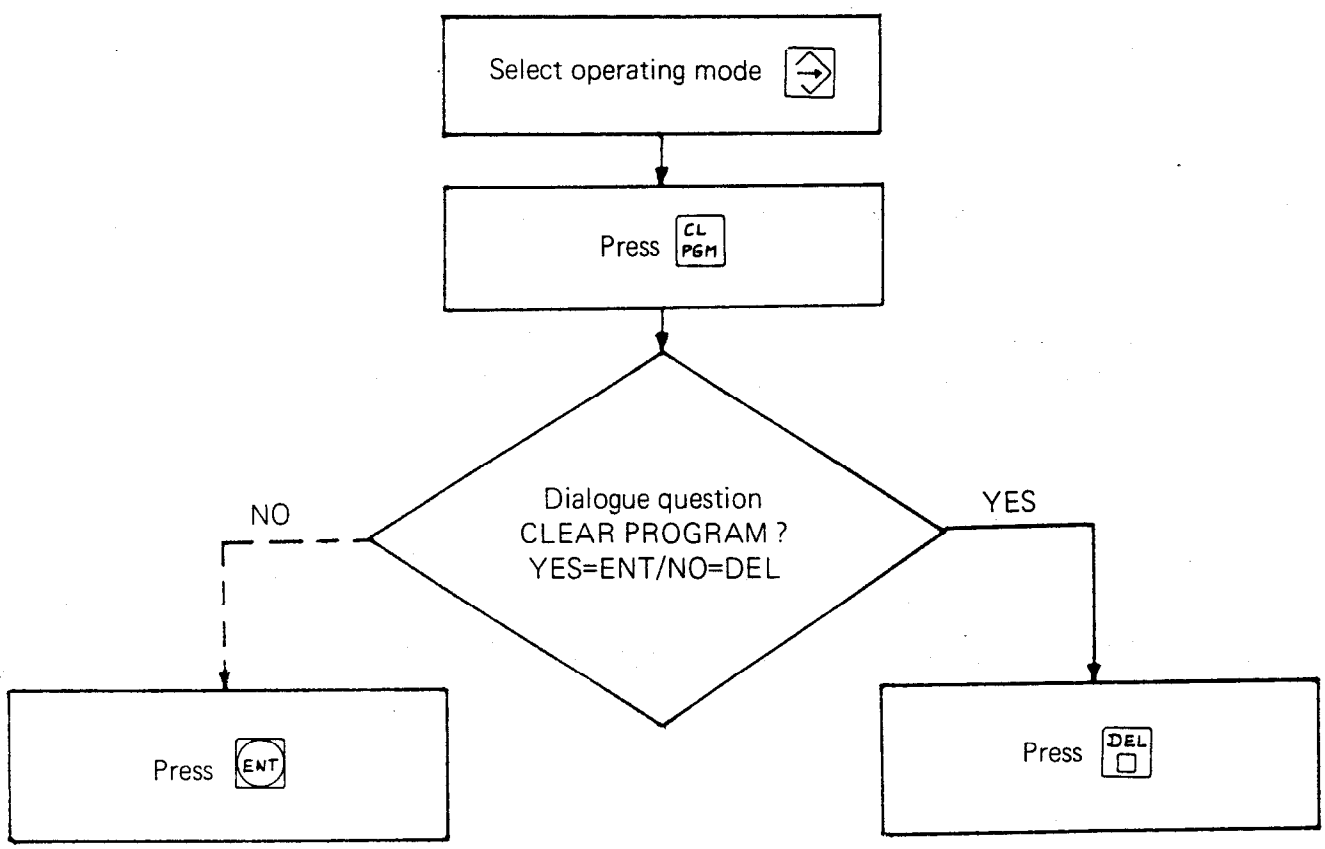

Please note:
The setting of the cursor is initiated with the → -key !

G Single block controlled (Positioning with MDI)

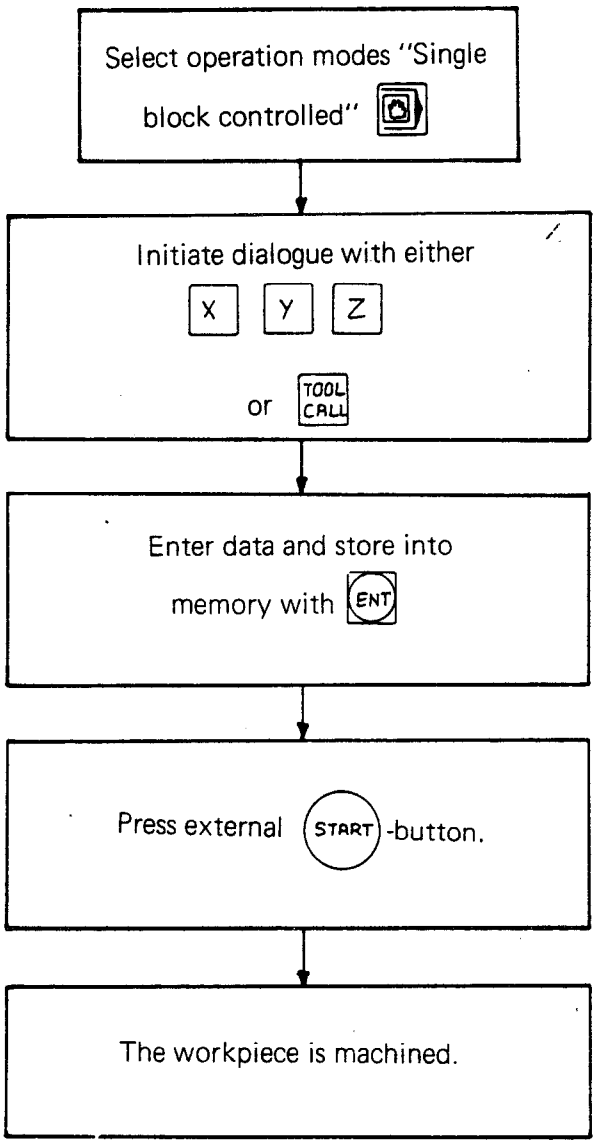

Note:
If a block has been programmed in incremental dimensions, it may be started as often as is required by pressing the external START-button.

A tool call can only take place if:
.the tool has been defined beforehand, i.e. the compensation values (length and radius) have already been stored in the program memory.
.the external START-button has been pressed.

H. Single-block and automatic program run

Stored programs are executed either in the operating modes "single-block program run" , or "automatic program run" .

H 1. Start of a program run

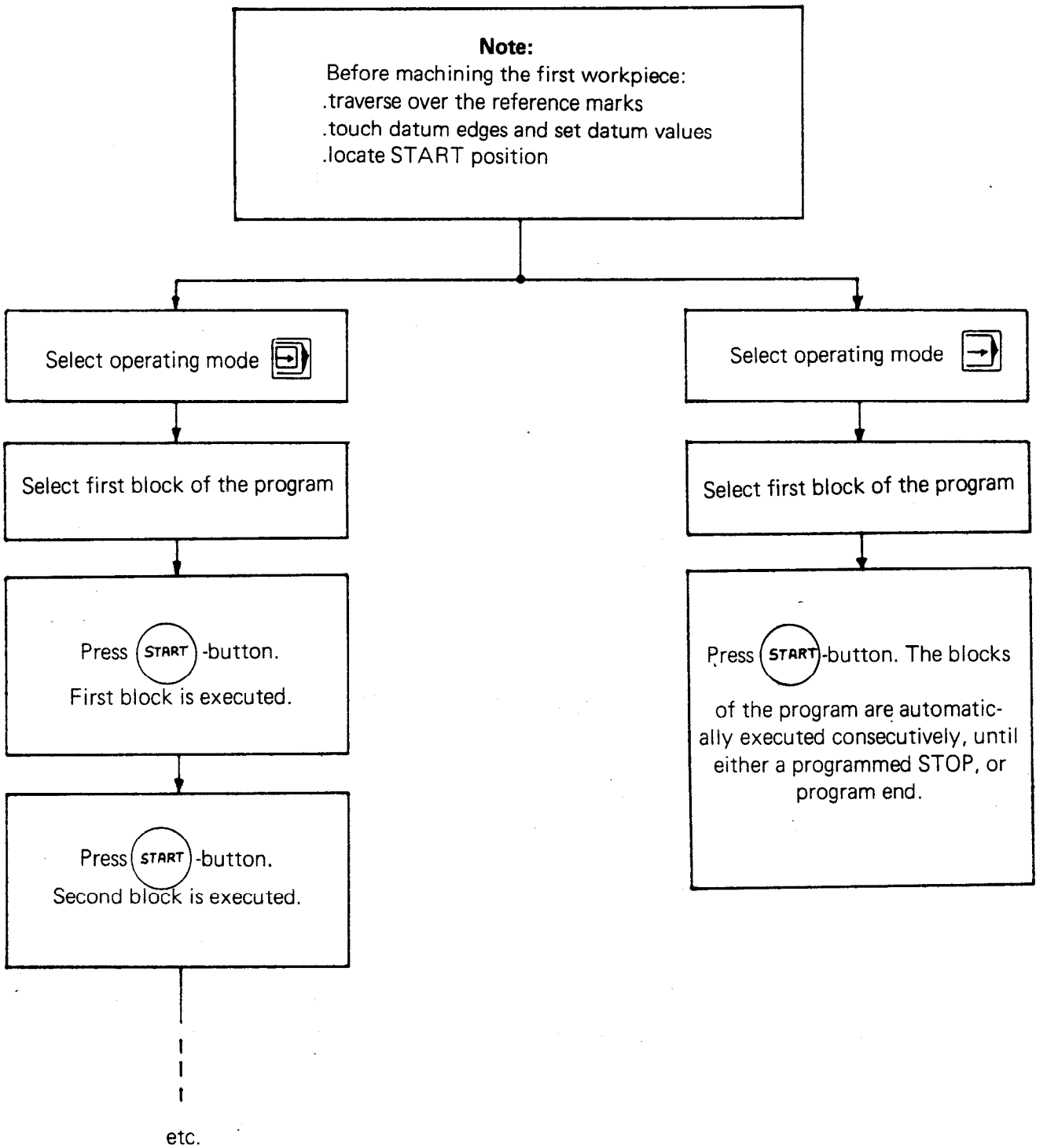

H 2. Interruption of program run

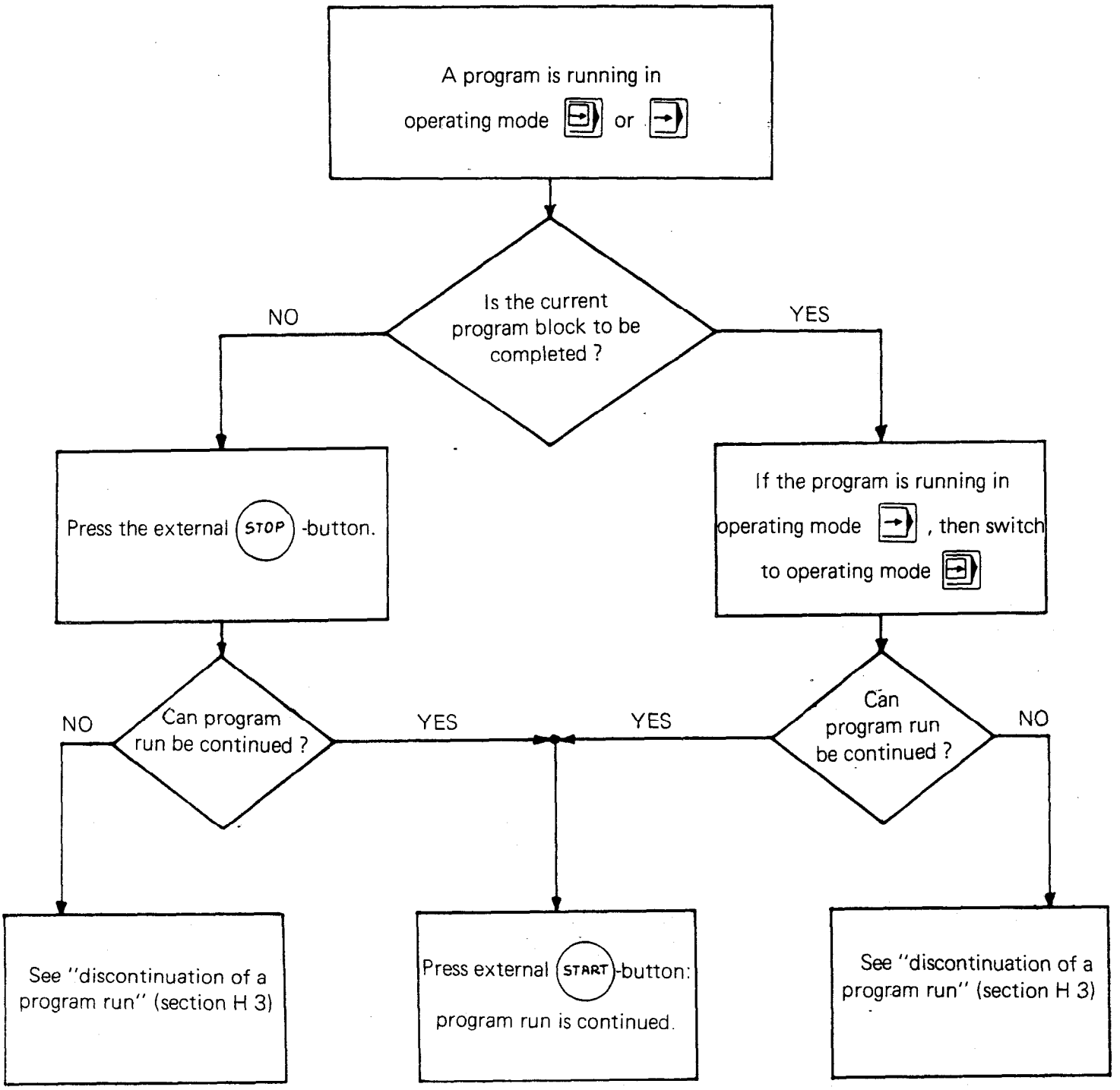

H 3. Discontinuation of program run

A program is running in operating mode or

Press external STOP-button.
Program run is interrupted.

Press STOP on TNC ; program run is discontinued.

Select operating mode

Amend block

Select operating mode or

Fulfill starting condition.
e.g. locate START-position, switch on spindle, switch on coolant.

Caution:
If a new tool is inserted after a program run has been discontinued, the tool definition must be amended with the new tool data (length and radius). The corresponding tool-call must be actuated with the external START-button in operating mode or to effect the new tool-compensation.

Start program run with external START-button.

H 4. Dry run of program

To check a program without tools, all tool-call blocks in the program must be amended with tool number 0 (= no tool).

When doing this, it is advantageous either to note down the block numbers of the tool calls beforehand, or to note down the block number of one tool-call and then extract the remaining tool-call blocks with the aid of a search routine.

During dry run of the program with the machine, the position displays show the corresponding absolute values of the programmed positions (drawing dimensions) without tool compensation.

After this check, remember to re-allocate all tool-call blocks with the appropriate tool numbers !

Error prevention and diagnosis

I 1. Error messages

The TNC 131/135 has a comprehensive monitoring system for the prevention of errors during entry and operation, and diagnosis of faults in the "control-machine" system.

The following are monitored:

.programming and operating errors
e.g. with the error messages

.internal control electronics
e.g. with the error messages

.certain machine functions
e.g. with the error messages

I 2. Cancelling of fault/error indication

While an error message is being displayed, the control is inactive i.e. further operations may only be performed after an error message has been cancelled.

The TNC 131/135 control differentiates between two types of error message:

.minor errors
e.g. KEY NON-FUNCTIONAL
This error is displayed continuously and may be cancelled by pressing [CE].

.Defects
such as faults in the measuring systems, drives, and important electronic control functions.
In the case of such major errors, the machine is simultaneously switched off via the EMERGENCY STOP switch. These errors are displayed by **flashing;** the mains supply voltage must be switched off and the error must be rectified.

Note:
When checking-back with the factory, please state the TNC-program number.

I 3. Exchanging buffer batteries

If the dialogue display should read "EXCHANGE BUFFER BATTERY", the batteries are to be replaced by new ones.
("empty" batteries will still last another week). The buffer batteries are located beneath the control panel in a battery compartment. When inserting new batteries, care should be taken in ensuring that the polarity conforms with the polarity signs shown in the compartment.

The required batteries are 3 "mignon cells" of the "leak-proof" type with IEC designation "LR6". We especially recommend the use of Mallory Alkaline batteries type MN 1500.

With discharged (or missing) buffer batteries, the program memory is powered by the mains supply. Continuation of operating is therefore possible - however, the memory content will be erased in the event of a mains power failure: **If a mains power failure occurs during a battery change (with discharged or missing batteries), the machine parameters must be re-entered (see section B 3).**

K 1. Control versions available

TNC 131 S /TNC 135 S with 500 program blocks **TNC 131 ST/TNC 135 ST** with 1000 program blocks	for incremental HEIDENHAIN linear transducers without built-in pulse shaping electronics, **grating pitch 0.04 mm** (e.g. LS 500 or LS 800 range), or angle encoders without built-in pulse shaping electronics. Connecting cable to the control: **max. length 20 m.**
TNC 131 RT /TNC 135 RT with 1000 program blocks	for HEIDENHAIN incremental linear transducers with grating pitch 0.1 mm (e.g. LIDA 325, LS 300) together with an external pulse shaping electronics unit (e.g. EXE 801 or EXE 802). Connecting cable transducer/EXE **max. length 20 m.** Connecting cable EXE/TNC **max. length 50 m.**

K 2. Technical specifications

Control type	shop floor-programmable point-to-point with straight cut control for 3 axes with 1 or 3 position loops. (In this case additional linear-interpolation, 2 1/2 D, without tool radius compensation) mm/inch instant calculation for all entry and display facilities. Resolution (entry): 0.005 mm or 0.0002 in. Resolution (display): 0.005 mm or 0.0002 in.
Operater prompting and displays	**TNC 131** LED-display line with a maximum of 32 alphanumeric symbols: Plain-language-dialogue and error messages (in different languages); Display of the complete program block. Additional displays for actual position values X, Y, Z and entry values. **TNC 135** 9-inch VDU-screen with a maximum of 8x32 alphanumerical characters. Plain-language dialogue and error messages (in different languages); display of the current program block as well as the preceeding block and two subsequent blocks. Additional displays for actual position values X, Y, Z and a display for entry values.

Program memory	Program memory for 500 (or optionally 1000) program blocks with buffer battery back-up.
Operating modes	**Manual operation:** The control functions as a digital readout. **Controlled traverse in single block operation:** Each positioning block is entered and immediately executed. Blocks are not stored in the memory. **Controlled in single block operation:** Each individual block of the entered program is executed with a press of the START-button. **Controlled/automatic run of the complete program sequence** The program is started with a press of the external start-button and it runs either to a programmed STOP or to the end of the program. **Program entry:** manually .with stationary machine direct from workpiece drawing or program sheet .simultaneously with the automatic machining of the first workpiece of a batch (Teach-in) .by transfer of actual machine position data during conventional machining of a workpiece (Playback) or externally .via the V.24 compatible databus. (e.g. from a HEIDENHAIN magnetic tape unit ME 101/ME 102.
Programmable functions	Nominal position values – absolute – or incremental dimensions. Entry in Cartesian or polar co-ordinates (no tool radius compensation); Tool number, tool length, and tool radius; Direction for tool radius compensation; Rapid traverse / Feed rate (in mm/min) or 0.1 in/min.); Auxiliary functions M 00 . . . M 99 Spindle speed; STOP; Subprograms (may be nested up to 8 times) Program part repeats Canned cycles: pecking tapping slot milling pocket milling
Program editing	By alteration of program words, insertion of program blocks, deletion of program blocks; search routine for finding program blocks with specific criterea.

Monitoring	The control monitors the functioning of important components within the TNC, as well as the positioning systems, transducers the spindle stop, and EMERGENCY-STOP circuit. If an error is detected during this monitoring, then a plain-language fault message is displayed and the machine is switched off via the EMERGENCY-STOP.
Reference-mark evaluation	Automatic reference value re-generation after a power failure by traversing over the transducer reference marks.
Maximum traversing speed	10 m/min.
Feed rate and rapid traverse override	Potentiometer on the TNC control panel.
Measuring systems	Incremental HEIDENHAIN linear transducers or angle encoders. TNC 131 S/ST or TNC 135 S/ST: grating pitch 0.04 mm TNC 131 RT or TNC 135 RT: grating pitch 0.1 mm TNC 135 B: grating pitch 0.02 mm
Control inputs	Transducers X, Y, Z START, STOP, Rapid traverse Verification "Auxiliary function complete" Limit switches (X+, X- / Y+, Y- / Z+, Z-), Feed rate release. Monitoring EMERGENCY STOP function. Signal "positioning loop closed" (without backlash, for common-drive only)
Control outputs	1 analogue output for X, Y, Z – with common drive or 3 analogue outputs X, Y, Z – with individual drives. Axis release X, Y, Z. Rapid traverse or control in operating mode "program run". Positioning direction (with common drive only, with backlash). Control in operating mode "automatic run". M-strobe S-strobe T-strobe 8 outputs for M-, S- and T-functions, coded. "coolant OFF" "coolant ON" "spindle counter-clockwise" "spindle HALT" "spindle clockwise" EMERGENCY STOP spindle lock on
Mains power supply	Voltage selector 100/120/140/200/220/240 V +10 % / -15 %, 48 . . . 62 Hz
Power input	TNC 131 approx. 40 W TNC 135 approx. 52 W (with VDU)
Ambient temperature:	Operation 0 . . . + 45° C (+32 . . . + 113° F) Storage -30 . . . + 70° C (- 22 . . . + 158° F)
Weight:	TNC 131 8.7 kg TNC 135 9.1 kg VDU-unit 6.4 kg

K 3. Linear measuring systems

K 3.1 Linear measuring systems for the TNC 131 S/ST and TNC 135 S/ST

The control types TNC 131 S/ST and TNC 135 S/ST operate with a digital step of 0.005 mm or 0.0002 in..
Incremental HEIDENHAIN linear transducers with a grating constant of 40 µm such as:

.LS 503 (measuring lengths 170 - 3040 mm)
.LS 507 (measuring lengths 170 - 1740 mm)
.LS 803 (measuring lengths 120 - 1240 mm)

may be connected.
For angle measurements (only in metric mode) the incremental angle encoder types ROD 250 and ROD 700, each with 9000 lines/revolution, are available. The display step is then 0.005°.

Provided that the required accuracy is maintained indirect linear measurements may be made e.g. via an ROD 450 angle encoder on the drive spindle. The required number of lines pre revolution for the angle encoder may be calculated as follows:

No. of lines/revolution = 25 x lead screw pitch (in mm)

The maximum cable length between the transducer and the control is **20 m**.
The maximum permissible scanning frequency is 25 kHz.

K 3.2 Linear transducers for TNC 135 B

TNC 135 B is a modified version of the TNC 135 ST which has an internal 4-fold evaluation stage instead of 8-fold. This permits the connection of HEIDENHAIN linear transducers having a grating pitch of 20 µm.
e.g.
.LS 603 (measuring lengths 170 - 3040 mm)
and
.LS 303 (measuring lengths 70 - 1240 mm)

For angle measurements, incremental angle encoders ROD 250 and ROD 700 with 18 000 lines per rev. may be used.

If accuracy requirements permit, an indirect linear measurement may be performed with an ROD 450 connected to the lead screw. The required line number per rev. can be calculated as follows:

Reqd. line number/revolution = 50 x spindle pitch (in mm).

The cable length between transducer and control my not exceed 20 m.

K 3.3 Linear measuring systems for the TNC 131 RT and TNC 135 RT

As the maximum permissible cable length between control types TNC 131 S/ST or TNC 135 S/ST and the transducer is 20 m, the special control types TNC 131 RT and TNC 135 RT were developed for greater distances between the control and the transducer. These controls possess linear transducer inputs for square-wave signals, and may therefore only be operated in connection with external pulse shaping units "EXE". The EXE signal is evaluated 4 times in the control.

The maximum cable length between the transducer and the EXE is 20 m, and between the EXE and the TNC 50m. So the total maximum cable length is 70 m.

The following transducers may be used for direct linear measurement:

.LB 326	(measuring length approx. 30 m)	with the EXE 802	(5-fold subdivision)
.LS 603	(measuring lengths 170 - 3040 mm)	with the EXE 802	(1-fold subdivision)
.LS 303	(measuring lengths 70 - 1240 mm)	with the EXE 802	(1-fold subdivision)

If necessary, an angle encoder may be used for angular measurement (as on the TNC 131 S/ST and the TNC 135 S/ST).
The EXE 802 with 1-fold subdivision is inserted for signal evaluation.
The TNC 131 RT/ 135 RT has 4-fold evaluation.
Consequently, angle encoders with 18000 lines should be used, e.g. ROD 250, and ROD 700.

Indirect linear measurement via an angle encoder, e.g. ROD 420 or ROD 426 is also possible with the use of an EXE 802 with 1-fold evaluation; the number of lines per revolution of the angle encoder may be calculated according to the formula:

No. of lines/revolution = 50 x screw pitch (in mm).

K 4. Dimensions

TNC 131S/ST

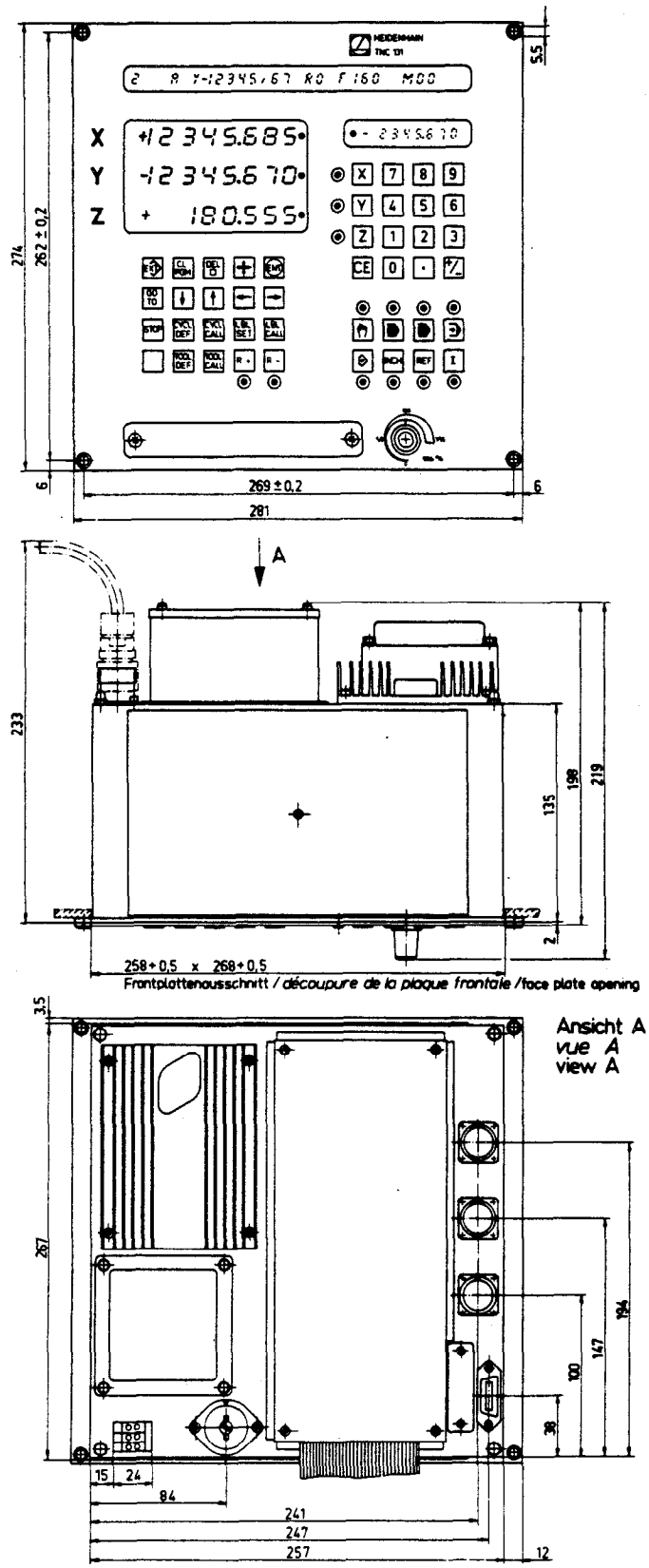

TNC 131R/RT

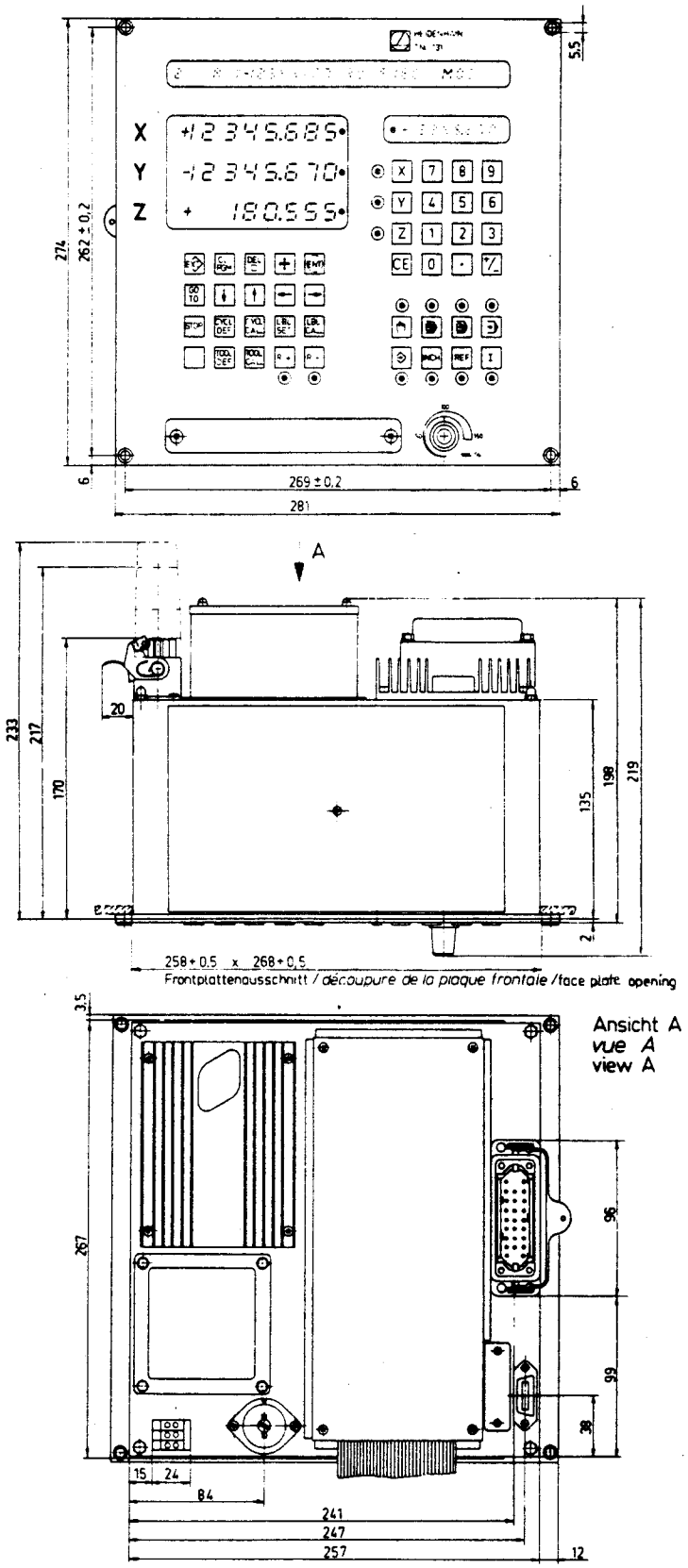
X
Y
Z
5.5
274
262 ± 0.2
6
269 ± 0.2
6
281
A
233
217
170
20
198
219
135
2
258 + 0.5 x 268 + 0.5
Frontplattenausschnitt / découpure de la plaque frontale / face plate opening
3.5
Ansicht A
vue A
view A
267
96
99
39
15
24
84
241
247
257
12

TNC 135S/ST/B

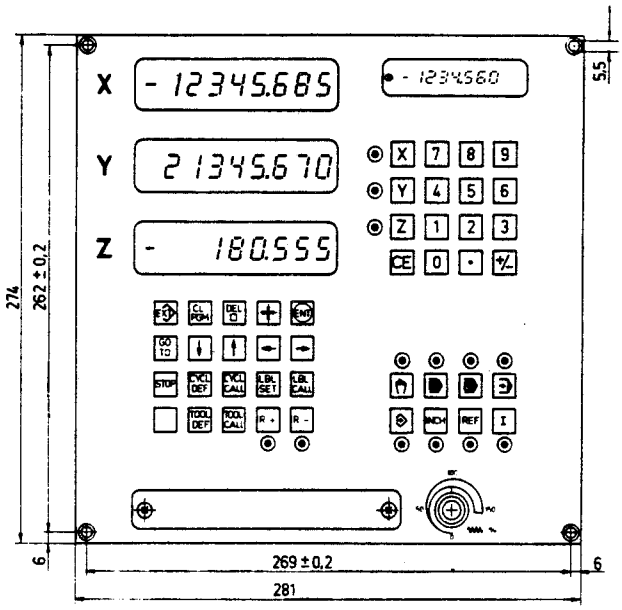

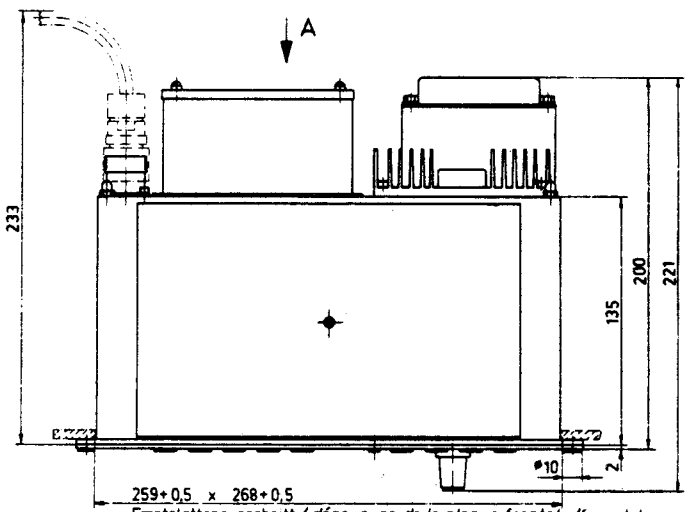

Frontplattenausschnitt / *découpure de la plaque frontale* / face plate opening

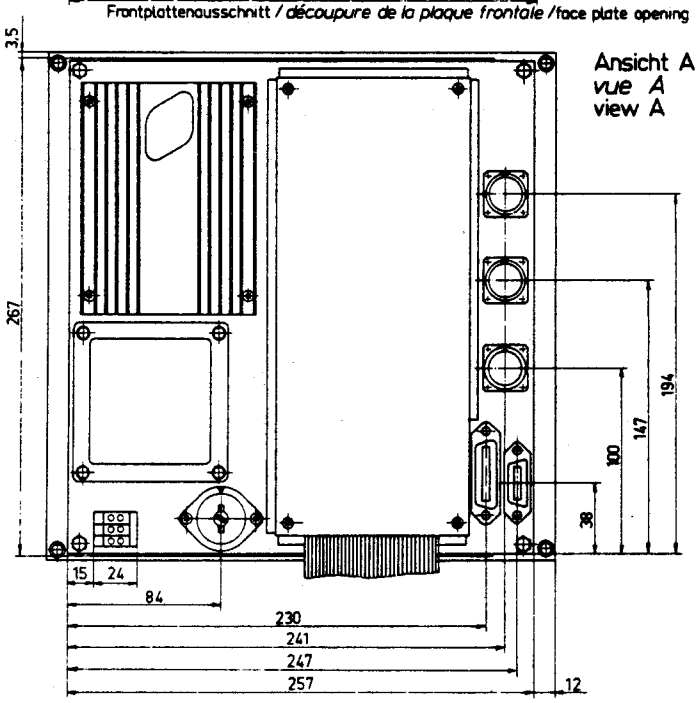

TNC 135R/RT

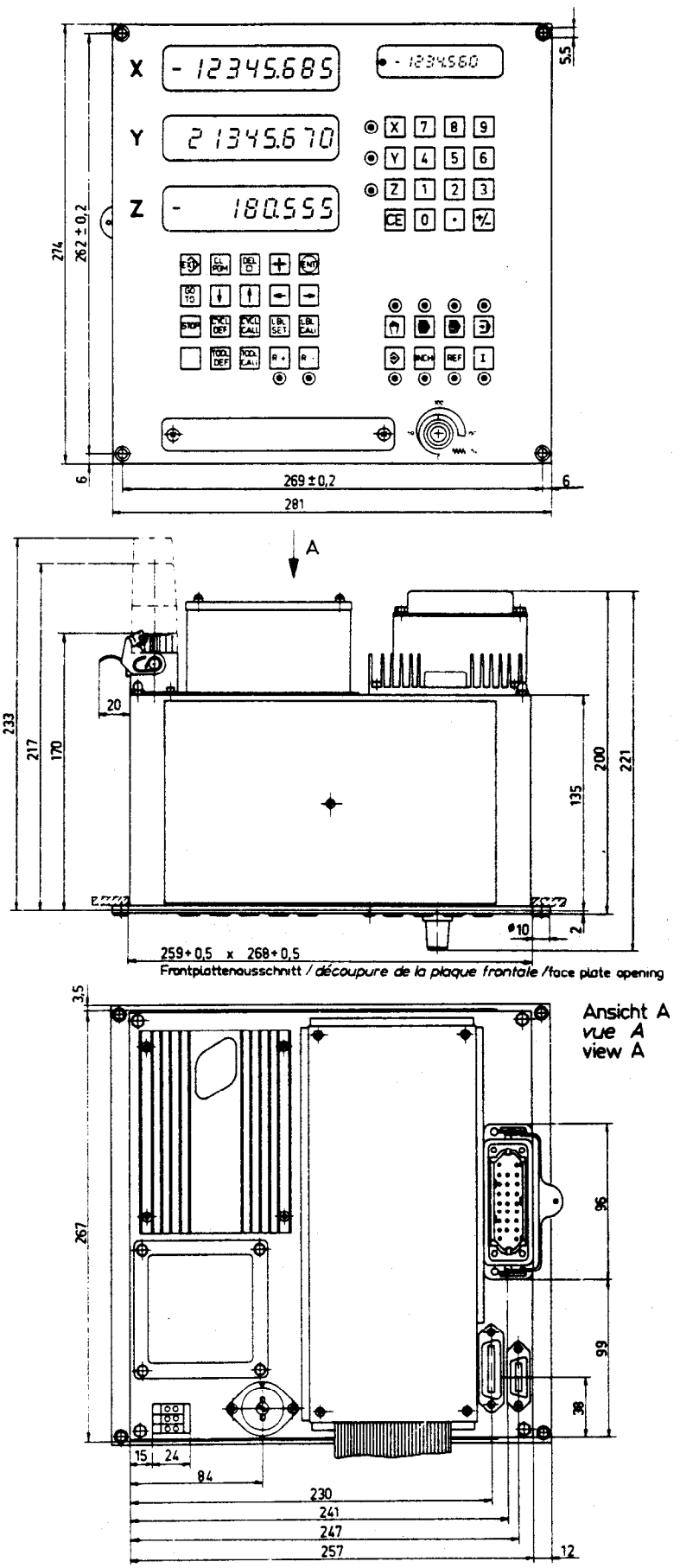
X
Y
Z
- 12345.685
21345.670
- 180.555
5,5
274
262 ± 0,2
6
269 ± 0,2
281
A
233
217
170
20
135
200
221
ø10
2
259+0,5 x 268+0,5
Frontplattenausschnitt / découpure de la plaque frontale / face plate opening
3,5
267
96
99
38
15
24
84
230
241
247
257
12
Ansicht A
vue A
view A

BE 135

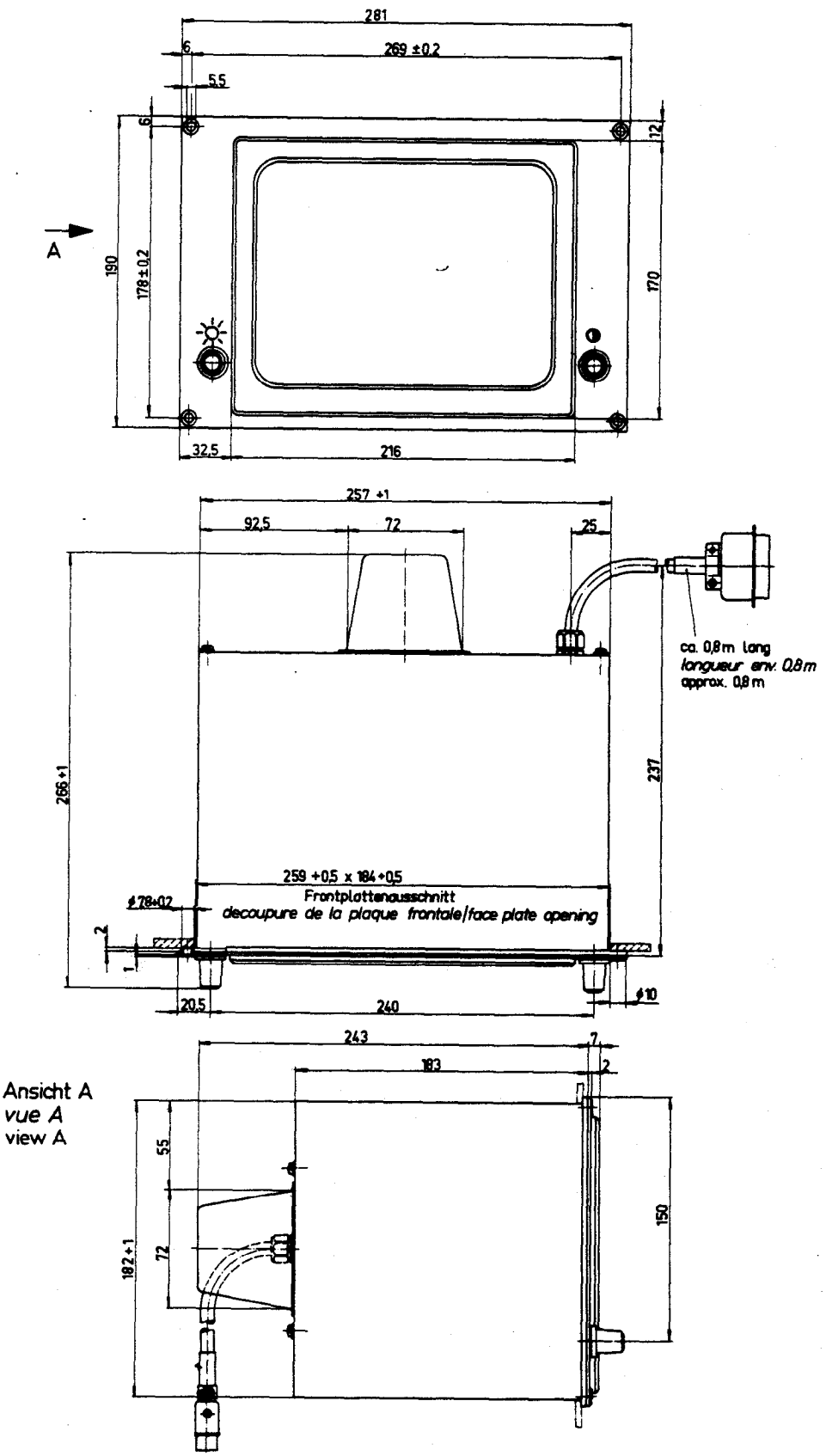
281
269 ±0,2
6
5,5
6
12
A
190
178±0,2
170
32,5
216
257 +1
92,5
72
25
ca. 0,8m lang
longueur env. 0,8m
approx. 0,8m
266+1
237
259 +0,5 x 184+0,5
Frontplattenausschnitt
découpure de la plaque frontale/face plate opening
ϕ78±0,2
2
1
20,5
240
ϕ10
243
7
183
2
Ansicht A
vue A
view A
55
182+1
72
150

HEIDENHAIN

214 275 22 · 2 · 1/90 · S · Printed in West Germany · Subject to technical modifications